ARCADE CITY PARK

ISSUED FOR CONSTRUCTION
FEBRUARY 12, 2019

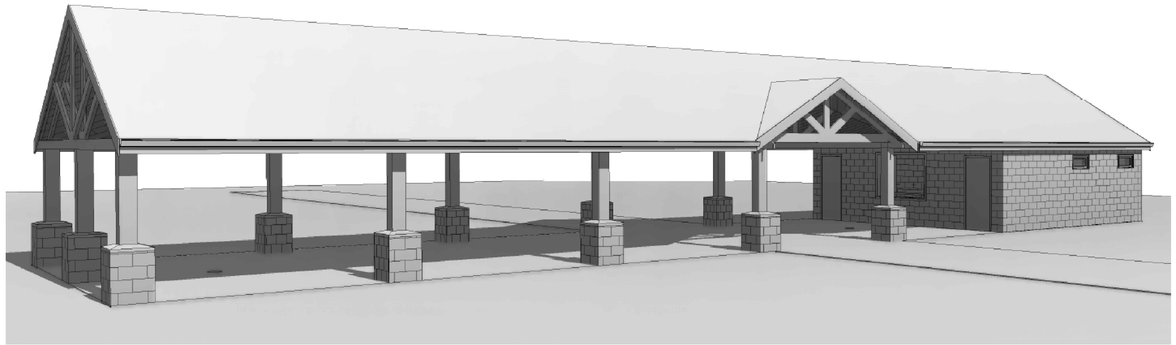

PROJECT DESCRIPTION

RESTROOM AND KITCHEN STRUCTURE WITH OPEN AIR PICNIC PAVILION TO SUPPORT THE NEW PARK FACILITY IN ARCADE, GA

ENCLOSED AREA = 640 SF

OPEN-AIR STRUCTURE AREA = 1,927 SF

CODE INFORMATION

APPLICABLE CODES:

- INTERNATIONAL BUILDING CODE 2012 EDITION WITH GEORGIA AMENDMENTS (2014, 2015, 2017, 2018)
- NFPA 101, LIFE SAFETY CODE 2012 EDITION WITH GEORGIA AMENDMENTS PER GA FIRE SAFETY LAW 120-3-3
- INTERNATIONAL FUEL GAS CODE, 2012 EDITION WITH GEORGIA AMENDMENTS (2014, 2015)
- INTERNATIONAL MECHANICAL CODE, 2012 EDITION WITH GEORGIA AMENDMENTS (2014, 2015)
- INTERNATIONAL PLUMBING CODE, 2012 EDITION WITH GEORGIA AMENDMENTS (2014, 2015)
- NATIONAL ELECTRICAL CODE, 2017 EDITION
- INTERNATIONAL ENERGY CONSERVATION CODE, 2009 EDITION WITH GEORGIA AMENDMENTS (2011 AND 2012)
- INTERNATIONAL FIRE CODE, 2012 EDITION WITH GEORGIA AMENDMENTS (2014)
- GEORGIA ACCESSIBILITY CODE, LAW 120-3-20, 2010 ADA STANDARDS

DRAWING INDEX

CONTACT INFORMATION

ARCHITECT

KELLY REILLY
WRIGHT GARDNER ARCHITECT, LLC
678-596-6159
KELLY@WRIGHTGARDNERARCHITECT.COM

STRUCTURAL ENGINEER

HOLLY JEFFREYS
SHEAR STRUCTURAL
678.438.2879
HJEFFREYS@SHEARSTRUCTURAL.COM

MEP ENGINEER

JEN DUCHAC
PROFICIENT ENGINEERING, INC.
404.330.9798
JEN@PEIATL.COM

wright gardner architect llc

154 Krog Street, #125
Atlanta, GA 30307
404-218-8460

ARCADE CITY PARK
PHASE 1 IMPROVEMENTS
ARCADE, GEORGIA

stamp:

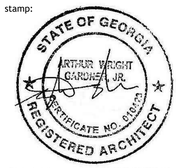

revisions

No.	Description	Date

sheet title:

COVER SHEET
PROJECT INFO

project number: **18-nnn**
drawing date: **MM.DD.2018**
scale as noted

sheet number:

A0-01

☐ NOT ISSUED FOR CONSTRUCTION
■ ISSUED FOR CONSTRUCTION

STANDARD MOUNTING HEIGHTS

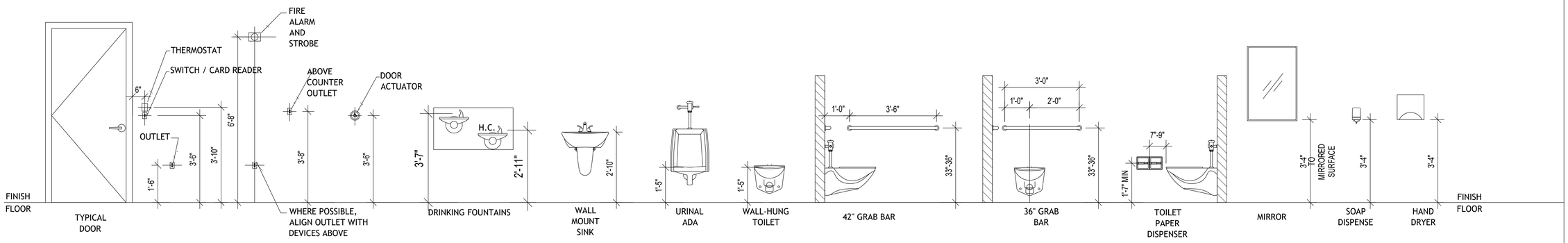

MATERIAL SPECIFICATIONS:

MASONRY

GEORGIA MASONRY SUPPLY
ACMU SPLIT FACE UNITS
CONTACT: JIN HAN, (678) 451-4115, jin.han@oldcastle.com

- BOTTOM 4 COURSES & COLUMN BASES: GOLDEN WHEAT
- TOP COURSES & COLUMN BASE "CAPS": LIGHT CREAM

ROOFING

ATAS INTERNATIONAL, INC.
DUTCH SEAM 11" STANDING SEAM METAL ROOF - MRD110
CONTACT: SCOTT STEPHENSON, 770.633.4644, sstephenson@atas.com

- REGAL BLUE

ROLLING COUNTER DOOR

OVERHEAD DOOR COMPANY
COUNTER DOOR, MODEL 652 - CLEAR ANODIZED ALUMINUM
SEE PLAN AND ELEVATIONS FOR DIMENSIONS

PAINT & STAIN

ALL EXPOSED WOOD AT PAVILION TO BE PAINTED, COLOR TBD.

INTERIOR FACES OF CMU BLOCK AT KITCHEN AND RESTROOMS TO RECEIVE EPOXY BLOCK FILLER BASE COAT PRIOR TO PAINT APPLICATION, COLOR TBD. ALL ROOMS TO RECEIVE SAME COLOR PAINT.

MILLWORK

KITCHEN COUNTERTOPS: WILSONART GREY LACE, 9224SS

KITCHEN CABINETS: WILSONART LAMINATE, WOOD GRAIN LOOK TBD

FLOORING

ALL INTERIOR FLOORS TO SEALED CONCRETE

TOILET ACCESSORIES:

TOILET PARTITIONS

ASI GLOBAL PARTITIONS, SOLID PLASTIC (HDPE)
FLOOR TO CEILING ANCHORED
#9400 FOLKSTONE GRAY

HAND DRYER

XLERATOR, XL-SB, BRUSHED STAINLESS

TOILET PAPER DISPENSER

SUMMIT SUPPLY, CTP-3
THREE ROLL LOCKING DISPENSER WITH COVER

BABY CHANGING STATION

KOALA CARE, KB200-01, GREY

DOORS & DOOR HARDWARE:

DOOR HARDWARE

BALL BEARING HINGES, PUSH / PULL SET W/ SINGLE CYLINDER DEADBOLT
HARDWARE FINISH: SATIN CHROME, HARDWARE GRADE: MEDIUM DUTY
ACCESSORIES: KICK PLATES, KICK DOWN HOLDER, WALL STOP

DOORS

HOLLOW METAL W/ RIGID HONEYCOMB CORE
PAINTED, COLOR TBD

wright gardner architect llc

154 Krog Street, #125
Atlanta, GA 30307
404-218-8460

ARCADE CITY PARK
PHASE 1 IMPROVEMENTS

ARCADE, GEORGIA

stamp:

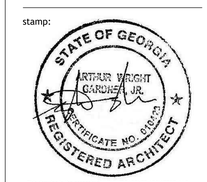

revisions

No.	Description	Date

sheet title:

MOUNTING HTS MATERIAL SPECS

project number: **17-053**
drawing date: **02.12.2019**
scale as noted

sheet number:

A0-02

☐ NOT ISSUED FOR CONSTRUCTION
■ ISSUED FOR CONSTRUCTION

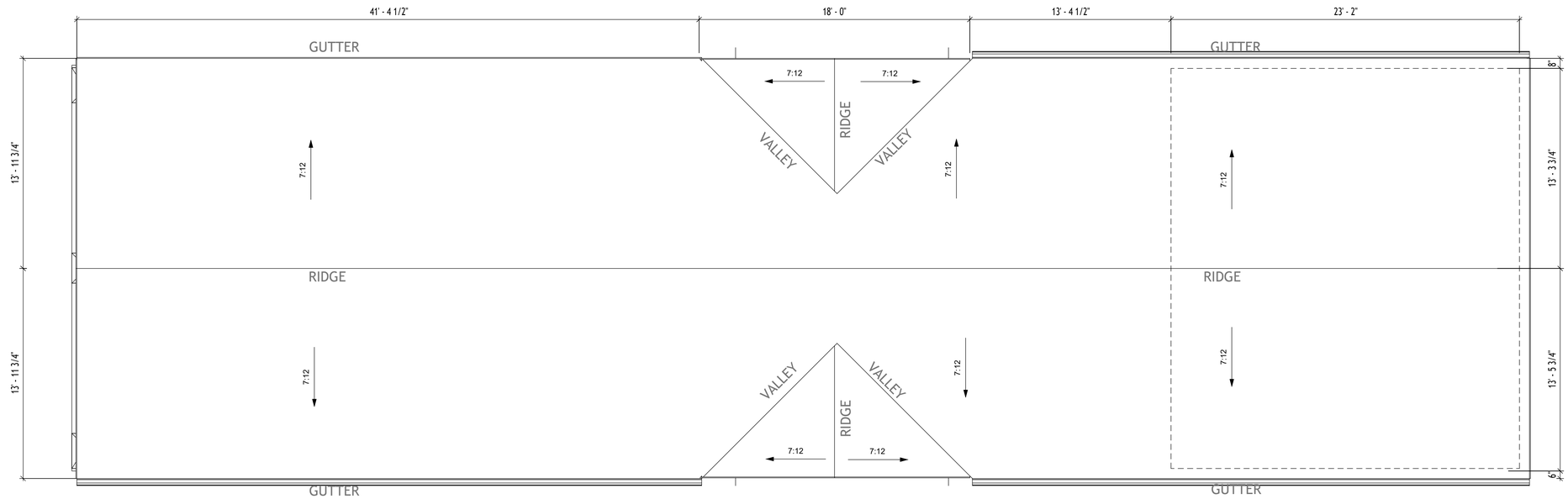

2 ROOF PLAN

1/4" = 1'-0"

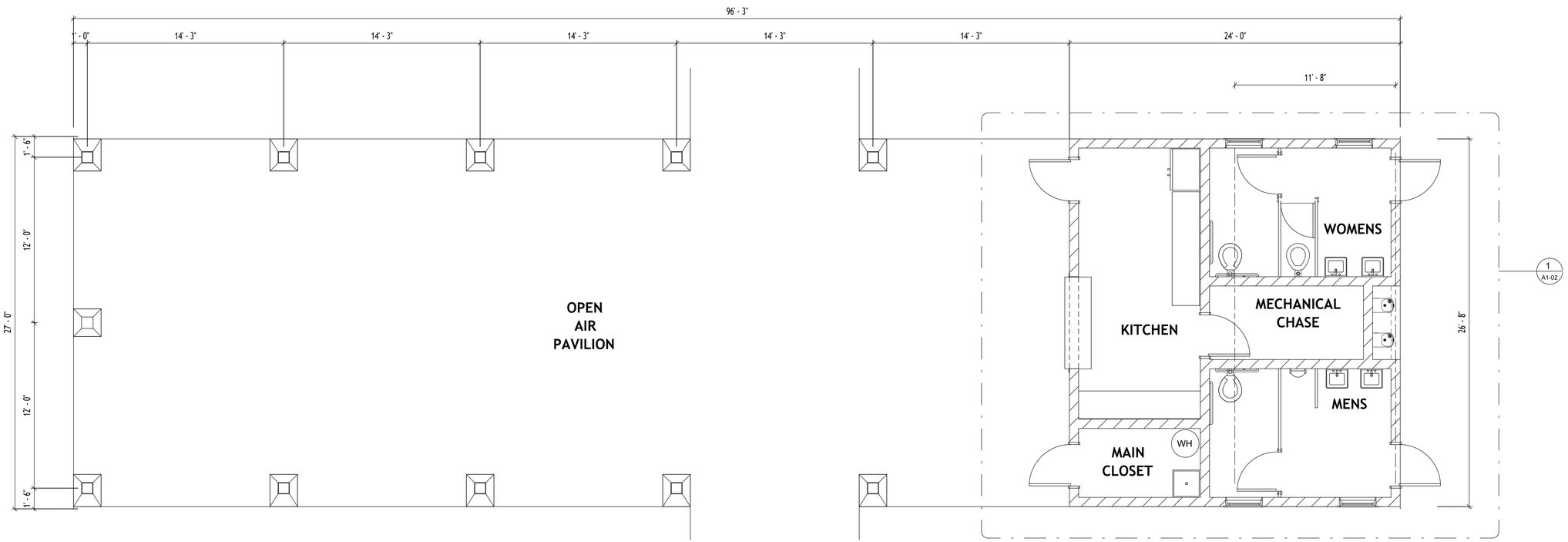

1 FLOOR PLAN

1/4" = 1'-0"

wright gardner architect llc
154 Krog Street, #125
Atlanta, GA 30307
404-218-8460

ARCADE CITY PARK
PHASE 1 IMPROVEMENTS

ARCADE, GEORGIA

stamp:

revisions

No.	Description	Date

sheet title:

FLOOR PLAN & ROOF PLAN

project number: **18-nnn**
drawing date: **MM.DD.2018**
scale as noted

sheet number:

A1-01

☐ NOT ISSUED FOR CONSTRUCTION
■ ISSUED FOR CONSTRUCTION

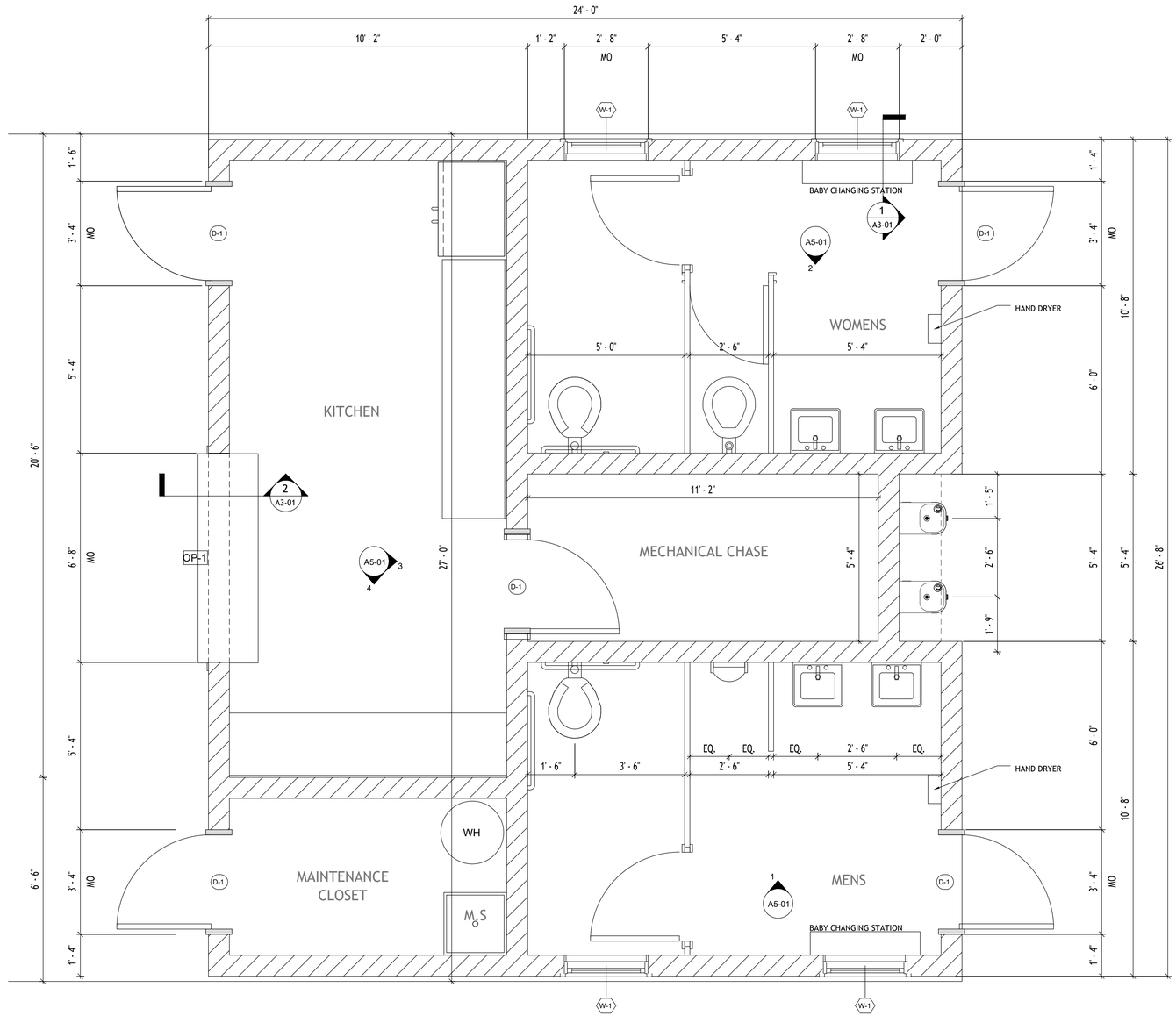

1 **ENLARGED FLOOR PLAN**

1/2" = 1'-0"

wright gardner architect llc

154 Krog Street, #125
Atlanta, GA 30307
404-218-8460

ARCADE CITY PARK
PHASE 1 IMPROVEMENTS

ARCADE, GEORGIA

stamp:

STATE OF GEORGIA
ARTHUR WRIGHT GARDNER, JR.
CERTIFICATE NO. 010073
REGISTERED ARCHITECT

revisions

No.	Description	Date

sheet title:

ENLARGED PLAN

project number: 17-053
drawing date: 02.12.2019
scale as noted

sheet number:

A1-02

☐ NOT ISSUED FOR CONSTRUCTION
■ ISSUED FOR CONSTRUCTION

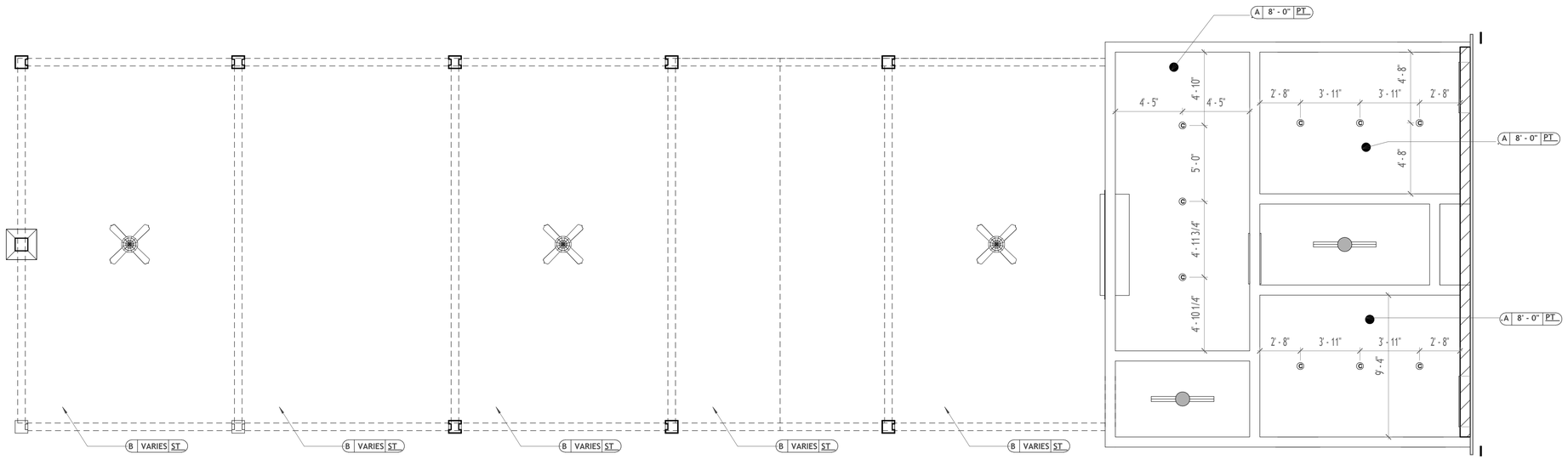

1 REFLECTED CEILING

1/4" = 1'-0"

RCP GENERAL NOTES

1. ALL CEILING FIXTURES ARE NEW, U.N.O.
2. COORDINATE THE WORK OF ALL TRADES INVOLVED IN THE CEILING WORK TO INSURE CLEARANCES FOR FIXTURES, DUCTS, PIPING, CEILING SUSPENSION SYSTEM, ETC., NECESSARY TO MAINTAIN THE FINISHED CEILING HEIGHTS INDICATED ON ARCHITECT'S DRAWINGS.
3. PERIMETER CEILING ANGLE, WHERE OCCURS, SHALL BE INSTALLED TIGHT TO VERTICAL SURFACES, FREE FROM CURVES, BREAKS OR OTHER IRREGULARITIES, AND PAINTED TO MATCH THE CEILING FINISH.
4. FURNISH AND INSTALL ALL FIXTURES, ASSOCIATED TRIM, FIXTURE LAMPS, AND SEISMIC BRACING AS REQUIRED.
5. PROVIDE CEILING ACCESS AS REQUIRED FOR EQUIPMENT AND SYSTEM MAINTENANCE, AND MATCH ADJACENT CEILING FINISH U.N.O.
6. ALL SWITCHES AND DIMMERS SHALL BE LOCATED 42" ABOVE FINISHED FLOOR TO CENTER OF SWITCH U.N.O. MULTIPLE SWITCHES AT ONE LOCATION SHALL BE GANGED TOGETHER AND FINISHED WITH ONE COVER PLATE U.N.O.
7. ALL SOFFITS AND CEILING HEIGHTS ARE DIMENSIONED FROM TOP OF FINISHED FLOOR TO BOTTOM OF FINISHED GWB OR CEILING TILE AND SHALL ALLOW FOR THICKNESS OF ALL FLOOR FINISHES.
8. THE REFLECTED CEILING PLAN INDICATES THE LOCATION OF CEILING HEIGHTS, LIGHT TYPES, LIGHT FIXTURES, SWITCH LOCATIONS, AND ASSOCIATED ITEMS. REFER TO ENGINEERING DRAWING (LIGHTING PLAN) FOR CIRCUITING, WIRING LAYOUT, AND ADDITIONAL INFORMATION.
9. IN THE EVENT OF DISCREPANCIES BETWEEN THE ARCHITECT'S REFLECTED CEILING PLAN AND THE ENGINEER'S LIGHTING PLAN, IMMEDIATELY NOTIFY THE ARCHITECT IN WRITING BEFORE ORDERING MATERIALS OR PROCEEDING WITH WORK.
10. ALL SPECIFIC INFORMATION CONCERNING INSTALLATION OF VARIOUS ABOVE-CEILING ELEMENTS ARE TO BE FOUND IN THE HVAC, PLUMBING, FIRE PROTECTION, ELECTRICAL AND LIGHTING DRAWINGS.
11. NOTIFY ARCHITECT OF ANY CONFLICTS OF LIGHT FIXTURE LOCATIONS WITH MAIN RUNNERS, DUCTS, STRUCTURES, HVAC AND/OR (E) CONDUIT, PRIOR TO FRAMING FOR LIGHTS. ANY DISCREPANCIES BETWEEN ARCHITECT'S CEILING GRID LOCATION AND ACTUAL FIELD CONDITIONS ARE TO BE CLARIFIED WITH THE ARCHITECT PRIOR TO FRAMING.
12. SUBMIT GRILLE, SPRINKLER, THERMOSTAT, AND OTHER FIXTURES AND ELEMENT LAYOUTS TO THE ARCHITECT FOR REVIEW AT LEAST 2 WEEKS PRIOR TO INSTALLATION.
13. FURNISH AND INSTALL UNDERWRITERS LABORATORIES INC. (UL) LABELED DEVICES THROUGHOUT.
14. INSTALL LIGHT FIXTURES WITH PROTECTIVE FILM OR SIMILAR COVER OVER LOUVER, LENS, BAFFLE, AND THE LIKE, TO AVOID FIXTURE SOILING OR DAMAGE: FIXTURES SHALL BE MAINTAINED CLEAN AND AS NEW; LAMPS SHALL BE NEW AT PROJECT COMPLETION.
15. REFER TO ENGINEERING DRAWINGS FOR ALL LIFE SAFETY DEVICES REQUIRED BY CODE AND ALL EMERGENCY LIGHT FIXTURES. ARCHITECTURAL DRAWINGS SHALL GOVERN LOCATION OF THESE DEVICES.
16. VERIFY FIELD CONDITIONS AND LOCATIONS OF ALL PLUMBING, MECHANICAL DUCTS, STRUCTURAL ELEMENTS AND ALL OTHER APPLICABLE ITEMS; INSTALL APPLICABLE NEW PLUMBING, MECHANICAL FANS, DUCTS, CONDUITS, AND OTHER RELATED AND APPURTENANT ITEMS SO AS TO NOT CONFLICT WITH LUMINARIES AND ANY AND ALL FIELD CONDITIONS.
17. SIDE WALL GRILLES LOCATED OVER DOORS AND OPENINGS TO BE CENTERED IN BOTH DIRECTIONS OVER THE DOOR OR OPENING
18. SIDE WALL GRILLES TO BE CENTERED ON FACE OF DROPPED SOFFITS (IN BOTH DIRECTIONS) UNLESS OTHERWISE NOTED
19. SIDE WALL GRILLES LOCATED ON WALLS TO MATCH HEIGHT OF SIDE WALL GRILLES OVER DOORS AND OPENINGS
20. CEILING MOUNTED GRILLES ARE TO BE CENTERED IN THE CEILING WHERE POSSIBLE U.N.O. COORDINATE THE LOCATION OF GRILLES WITH STRUCTURE, LIGHTING, PLUMBING & MECHANICAL IN ORDER TO MAINTAIN CEILING HEIGHTS

RCP KEY

CEILING TAG

A 8' - 0" PT — ceiling height a.f.f; ceiling finish; ceiling material type

CEILING TYPE LEGEND

A. 1/2" GYPSUM BOARD PAINTED CEILING,
B. STAINED WOOD DECKING

wright gardner architect llc

154 Krog Street, #125
Atlanta, GA 30307
404-218-8460

ARCADE CITY PARK
PHASE 1 IMPROVEMENTS

ARCADE, GEORGIA

stamp:

STATE OF GEORGIA
ARTHUR WRIGHT GARDNER, JR.
CERTIFICATE NO. 018027
REGISTERED ARCHITECT

revisions

No.	Description	Date

sheet title:

REFLECTED CEILING PLAN

project number: 18-nnn
drawing date: MM.DD.2018
scale as noted

sheet number:

A1-03

☐ NOT ISSUED FOR CONSTRUCTION
■ ISSUED FOR CONSTRUCTION

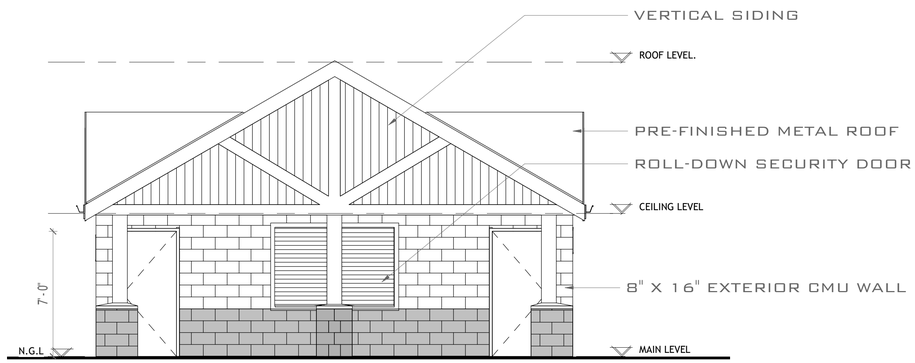

2 WEST ELEVATION

1/4" = 1'-0"

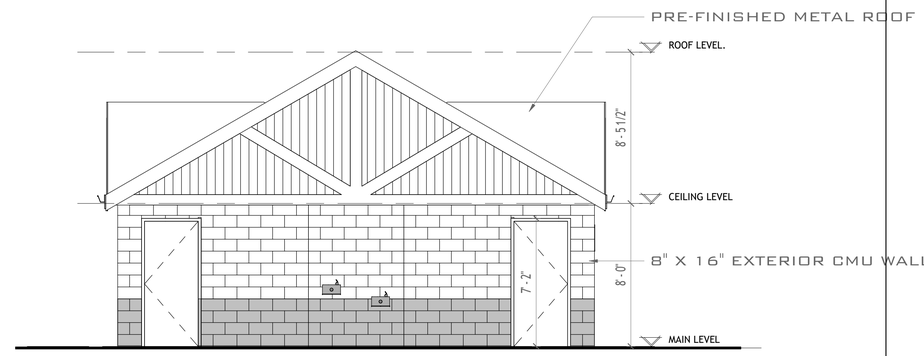

1 EAST ELEVATION

1/4" = 1'-0"

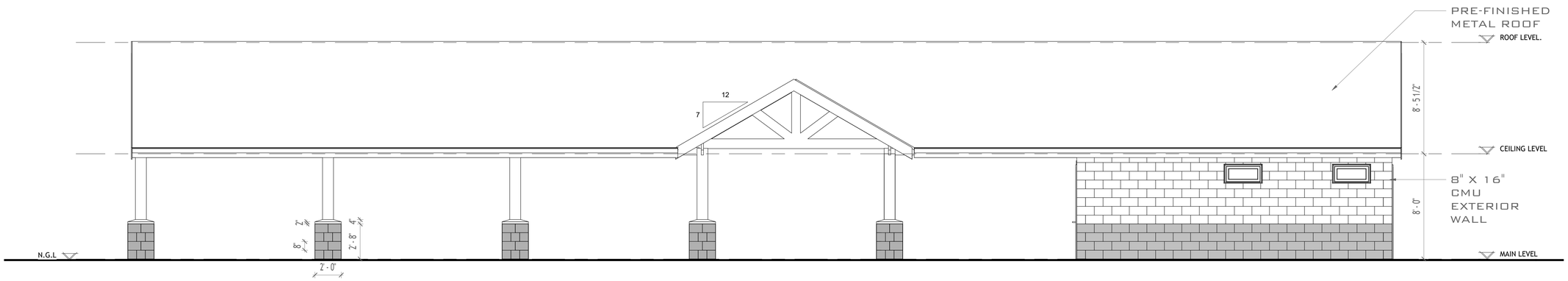

3 LONG ELEVATION

1/4" = 1'-0"

wright gardner architect llc

154 Krog Street, #125
Atlanta, GA 30307
404-218-8460

ARCADE CITY PARK
PHASE 1 IMPROVEMENTS

ARCADE, GEORGIA

stamp:

revisions

No.	Description	Date

sheet title:

EXTERIOR ELEVATIONS

project number: 18-nnn
drawing date: MM.DD.2018
scale as noted

sheet number:

A2-01

☐ NOT ISSUED FOR CONSTRUCTION
■ ISSUED FOR CONSTRUCTION

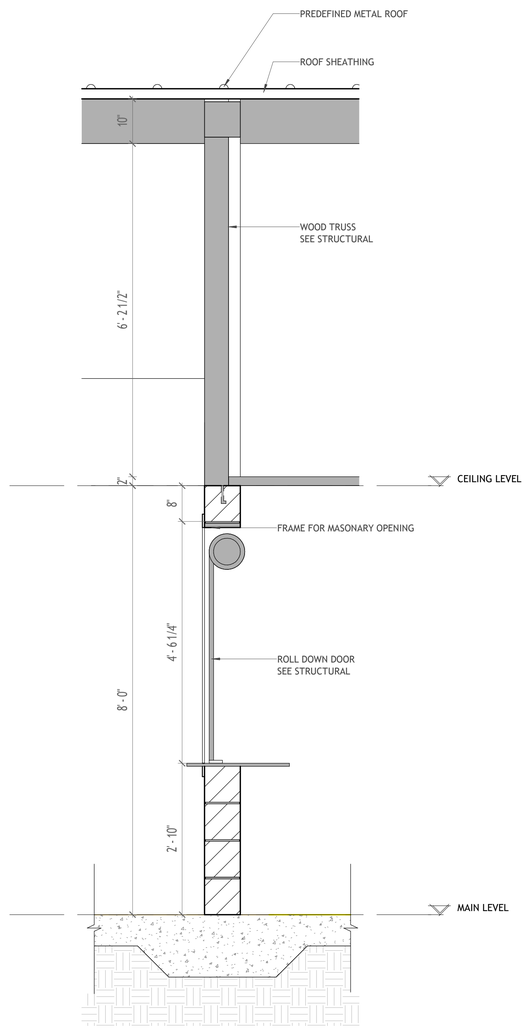

2 **WALL SECTION @ COUNTER**
3/4" = 1'-0"

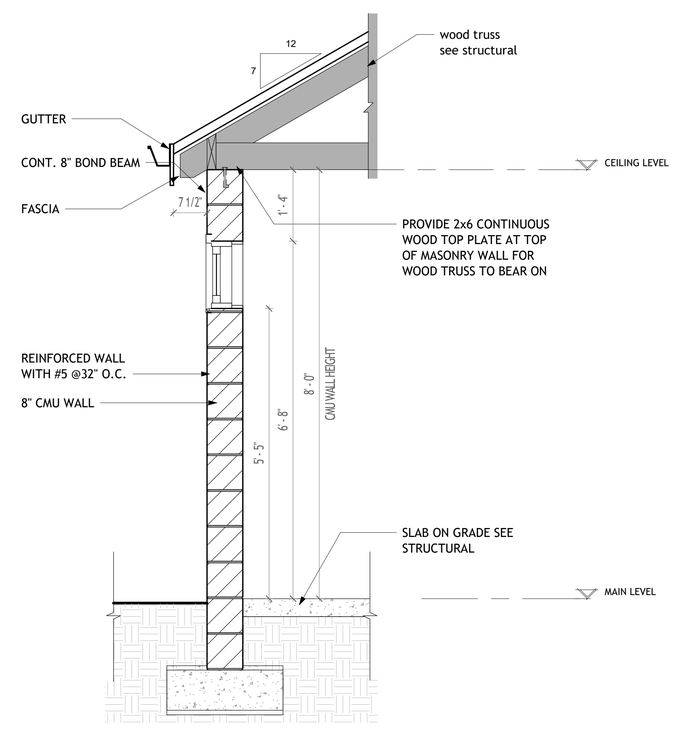

1 **TYPICAL WALL SECTION**
3/4" = 1'-0"

wright gardner architect llc
154 Krog Street, #125
Atlanta, GA 30307
404-218-8460

ARCADE CITY PARK
PHASE 1 IMPROVEMENTS
ARCADE, GEORGIA

stamp:

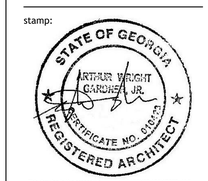

revisions

No.	Description	Date

sheet title:

WALL SECTIONS

project number: **18-nnn**
drawing date: **MM.DD.2018**
scale as noted

sheet number:

A3-01

☐ NOT ISSUED FOR CONSTRUCTION
■ ISSUED FOR CONSTRUCTION

WINDOW SCHEDULE

Type Mark	Width	Height	Description
W-1	2' - 8"	1' - 4"	FIXED
W-2	6' - 0"	4' - 0"	FIXED

OPENING SCHEDULE

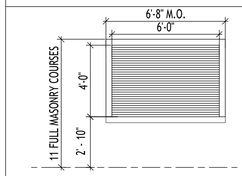

W-2	TYPE	ROLL-UP COUNTER DOOR

WINDOW ELEVATION

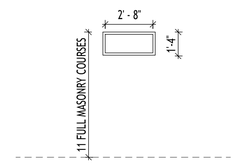

W-1	TYPE	FIXED

DOOR SCHEDULE

Type Mark	Width	Height	Description
D-1	3' - 0"	7' - 0"	HOLLOW METAL

DOOR ELEVATION

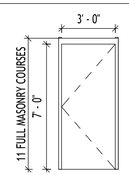

D-1	TYPE	SWING DOOR

wright gardner architect llc

154 Krog Street, #125
Atlanta, GA 30307
404-218-8460

ARCADE CITY PARK
PHASE 1 IMPROVEMENTS

ARCADE, GEORGIA

stamp:

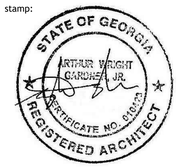

revisions

No.	Description	Date

sheet title:

DOOR & WINDOW SCHEDULE

project number: **17-053**
drawing date: **02.12.2019**
scale as noted

sheet number:

A4-01

☐ NOT ISSUED FOR CONSTRUCTION
■ ISSUED FOR CONSTRUCTION

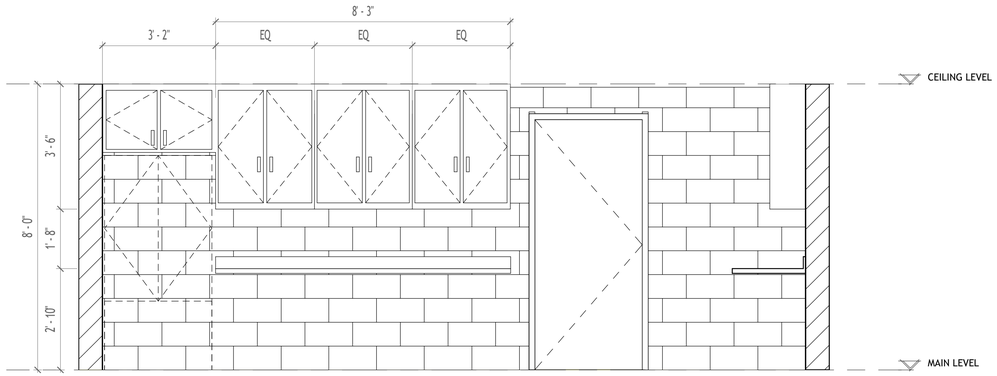

3 KITCHEN ELEVATION

1/2" = 1'-0"

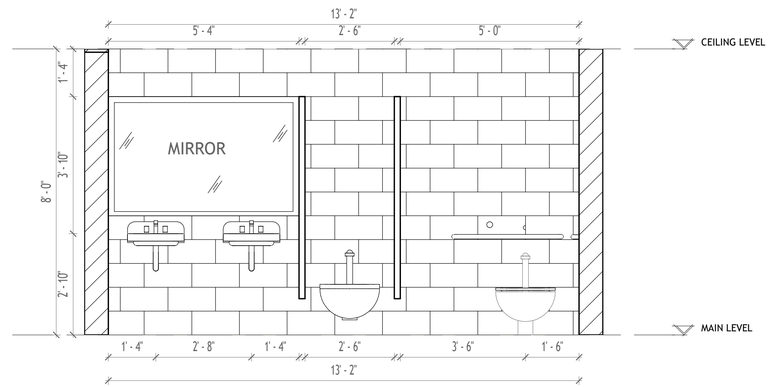

2 WOMENS BATHROOM ELEVATION

1/2" = 1'-0"

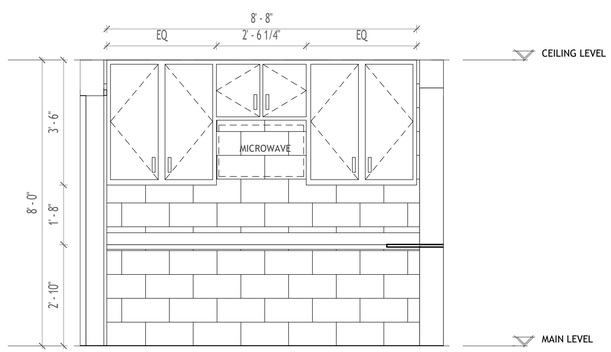

4 KITCHEN ELEVATION 2

1/2" = 1'-0"

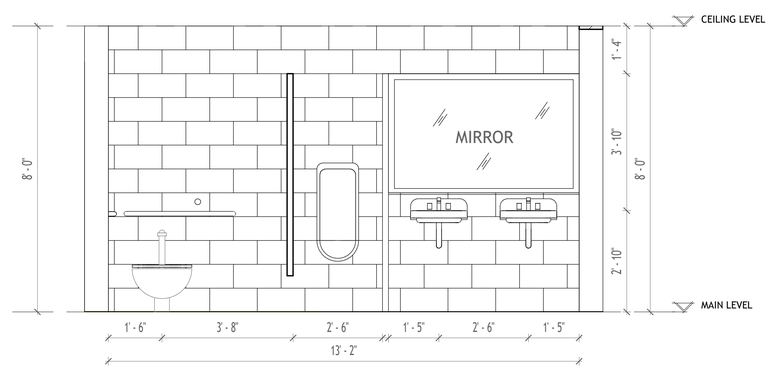

1 MENS BATHROOM ELEVATION

1/2" = 1'-0"

wright gardner architect llc

154 Krog Street, #125
Atlanta, GA 30307
404-218-8460

ARCADE CITY PARK
PHASE 1 IMPROVEMENTS

ARCADE, GEORGIA

stamp:

revisions

No.	Description	Date

sheet title:

INTERIOR ELEVATIONS

project number: 18-nnn
drawing date: MM.DD.2018
scale as noted

sheet number:

A5-01

☐ NOT ISSUED FOR CONSTRUCTION
■ ISSUED FOR CONSTRUCTION

GENERAL

1. NO PROVISION OF ANY REFERENCED STANDARD SPECIFICATION, MANUAL OR CODE (WHETHER OR NOT SPECIFICALLY INCORPORATED BY REFERENCE IN THE CONTRACT DOCUMENTS) SHALL BE EFFECTIVE TO CHANGE THE DUTIES AND RESPONSIBILITIES OF OWNER, CONTRACTOR, DESIGN PROFESSIONAL, SUPPLIER, OR ANY OF THEIR CONSULTANTS, AGENTS, OR EMPLOYEES FROM THOSE SET FORTH IN THE CONTRACT DOCUMENTS. NOR SHALL IT BE EFFECTIVE TO ASSIGN TO THE DESIGN PROFESSIONAL OF RECORD OR ANY OF THE DESIGN PROFESSIONAL OF RECORD'S CONSULTANTS, AGENTS, OR EMPLOYEES ANY DUTY OR AUTHORITY TO SUPERVISE OR DIRECT THE FURNISHING OR PERFORMANCE OF THE WORK OR ANY DUTY OR AUTHORITY TO UNDERTAKE RESPONSIBILITIES CONTRARY TO THE PROVISIONS OF THE CONTRACT DOCUMENTS.

2. CONTRACT DOCUMENTS INCLUDE, BUT ARE NOT LIMITED TO, THE STRUCTURAL DOCUMENTS (DRAWINGS AND SPECIFICATIONS), BUT DO NOT INCLUDE SHOP DRAWINGS, VENDOR DRAWINGS, OR MATERIAL PREPARED AND SUBMITTED BY THE CONTRACTOR.

3. REFERENCE TO STANDARD SPECIFICATIONS OF ANY TECHNICAL SOCIETY, ORGANIZATION, OR ASSOCIATION OR TO CODES OF LOCAL OR STATE AUTHORITIES, SHALL MEAN THE LATEST STANDARD, CODE, SPECIFICATION OR TENTATIVE SPECIFICATION ADOPTED AT THE DATE OF TAKING BIDS, UNLESS SPECIFICALLY STATED OTHERWISE.

4. CONTRACT DOCUMENTS SHALL GOVERN IN THE EVENT OF A CONFLICT WITH THE CODE OF PRACTICE OR SPECIFICATIONS OF ACI, PCI, AISC, SJI OR OTHER STANDARDS. WHERE A CONFLICT OCCURS WITHIN THE CONTRACT DOCUMENTS, THE STRICTEST REQUIREMENT SHALL GOVERN.

5. MATERIAL, WORKMANSHIP, AND DESIGN SHALL CONFORM TO THE REFERENCED BUILDING CODE.

6. CONTRACTOR SHALL COORDINATE THE STRUCTURAL DOCUMENTS WITH THE ARCHITECTURAL, MECHANICAL, ELECTRICAL, PLUMBING AND CIVIL DOCUMENTS. DESIGN PROFESSIONAL SHALL BE NOTIFIED OF ANY DISCREPANCY OR OMISSION. FOR DIMENSIONS NOT SHOWN ON THE STRUCTURAL DRAWINGS SEE THE ARCHITECTURAL DRAWINGS.

7. CONTRACTOR SHALL VERIFY EXISTING DIMENSIONS, ELEVATIONS, AND SITE CONDITIONS BEFORE STARTING WORK. DESIGN PROFESSIONAL SHALL BE NOTIFIED OF ANY DISCREPANCY.

8. CONTRACTOR SHALL VERIFY THAT MISCELLANEOUS FRAMING SHOWN ON THE STRUCTURAL DRAWINGS FOR OWNER-FURNISHED ITEMS, PARTITIONS, ETC. IS CONSISTENT WITH THE REQUIREMENTS OF SUCH ITEMS.

9. CONTRACTOR HAS SOLE RESPONSIBILITY FOR MEANS, METHODS, TECHNIQUES, SEQUENCES, AND PROCEDURES OF CONSTRUCTION.

10. THE STRUCTURE IS STABLE ONLY IN ITS COMPLETED FORM. TEMPORARY SUPPORTS REQUIRED FOR STABILITY DURING ALL INTERMEDIATE STAGES OF CONSTRUCTION SHALL BE DESIGNED, FURNISHED, AND INSTALLED BY THE CONTRACTOR.

11. CONTRACTOR HAS SOLE RESPONSIBILITY TO COMPLY WITH ALL OSHA REGULATIONS.

12. ELECTRONIC DRAWING FILES WILL NOT BE PROVIDED TO THE CONTRACTOR. REPRODUCTION OF STRUCTURAL DRAWINGS FOR SHOP DRAWINGS IS NOT PERMITTED.

13. REVIEW OF SUBMITTALS OR SHOP DRAWINGS BY THE DESIGN PROFESSIONAL DOES NOT RELIEVE THE CONTRACTOR OF THE SOLE RESPONSIBILITY TO REVIEW AND CHECK ALL SUBMITTALS AND SHOP DRAWINGS BEFORE SUBMITTING TO THE DESIGN PROFESSIONAL. CONTRACTOR REMAINS SOLELY RESPONSIBLE FOR ERRORS AND OMISSIONS ASSOCIATED WITH THE PREPARATION OF SHOP DRAWINGS AS THEY PERTAIN TO MEMBER SIZES, DETAILS, AND DIMENSIONS SPECIFIED IN THE CONTRACT DOCUMENTS.

14. DETAILS LABELED "TYPICAL" ON THE STRUCTURAL DRAWINGS APPLY TO ALL SITUATIONS OCCURRING ON THE PROJECT THAT ARE THE SAME OR SIMILAR TO THE TYPICAL DETAILS UNLESS THOSE LOCATIONS ARE SPECIFICALLY DETAILED OTHERWISE.

15. STRUCTURAL DESIGN PROFESSIONAL IS NOT RESPONSIBLE FOR THE DESIGN OF CURTAIN WALL/WINDOW WALL SYSTEMS, COLD-FORMED METAL FRAMING, OR OTHER SYSTEMS NOT SHOWN IN THE STRUCTURAL DOCUMENTS. SUCH SYSTEMS SHALL BE DESIGNED, FURNISHED, AND INSTALLED AS REQUIRED BY OTHER PORTIONS OF THE CONTRACT DOCUMENTS.

16. SUBMITTALS

    16.1. SUBMITTALS BY THE CONTRACTOR ARE NOT A PART OF THE CONTRACT DOCUMENTS. PRIOR TO THE INITIAL SUBMITTAL, CONTRACTOR SHALL SUBMIT TO THE DESIGN PROFESSIONAL A SCHEDULE OF SUBMITTED INFORMATION.

    16.2. SUBMITTALS SHALL BE ACCOMPANIED BY A TRANSMITTAL LETTER WITH THE FOLLOWING INFORMATION:

    PROJECT NAME
    CONTRACTOR'S NAME
    DATE SUBMITTED
    DESCRIPTION OF ITEMS SUBMITTED. IDENTIFY WORK AND PRODUCT BY SPECIFICATION SECTION NUMBER OF DRAWINGS AND OTHER PERTINENT DATA.

    16.3. CONTRACTOR SHALL DIRECT SPECIFIC ATTENTION ON THE SUBMITTAL TO ANY DEVIATION FROM THE CONTRACT DOCUMENTS. CONTRACTOR SHALL STAMP AND SIGN EACH SHEET OF SHOP DRAWINGS AND PRODUCT DATA, AND SIGN OR INITIAL EACH SAMPLE TO CERTIFY COMPLIANCE WITH REQUIREMENTS OF CONTRACT DOCUMENTS. SUBMITTALS RECEIVED WITHOUT THE CONTRACTOR'S STAMP OF REVIEW WILL BE RETURNED TO THE CONTRACTOR FOR REVIEW AND RESUBMITTAL.

    16.4. WORK REQUIRING SHOP DRAWINGS, WHETHER CALLED FOR BY THE CONTRACT DOCUMENTS OR REQUESTED BY THE CONTRACTOR, SHALL NOT COMMENCE UNTIL THE SUBMISSION HAS BEEN REVIEWED BY THE DESIGN PROFESSIONAL. WORK MAY COMMENCE IF THE CONTRACTOR VERIFIES THE ACCURACY OF THE DESIGN PROFESSIONAL'S CORRECTIONS AND NOTATIONS AND COMPLIES WITH THEM WITHOUT EXCEPTION AND WITHOUT REQUESTING CHANGE IN CONTRACT SUM OR CONTRACT TIME AT COPY OF THE MARKED STRUCTURAL SHOP DRAWINGS WITH THE DESIGN PROFESSIONAL'S REVIEW STAMP IS TO BE MAINTAINED AT THE JOB SITE.

CODE/DESIGN CRITERIA

1. STRUCTURE IS DESIGNED IN ACCORDANCE WITH THE FOLLOWING:

    1.1. INTERNATIONAL BUILDING CODE, 2012 EDITION WITH GEORGIA AMENDMENTS.

2. GRAVITY LOADS

    2.1. UNIFORM FLOOR LIVE LOADS (REDUCED AS ALLOWED BY THE BUILDING CODE):

    SLAB ON GRADE 100 PSF

    2.2. UNIFORM ROOF LIVE LOADS (REDUCED AS ALLOWED BY THE BUILDING CODE):

    ROOF 20 PSF
    GROUND SNOW LOAD, P_g 5 PSF

    PONDING AND DRIFT EFFECTS HAVE BEEN INCLUDED IN THE DESIGN.

    2.3. DEAD LOADS (IN ADDITION TO STRUCTURE SELF-WEIGHT):

    ROOF:
    - ROOFING 3 PSF
    - INSULATION 5 PSF
    - MISCELLANEOUS 3 PSF
    - CEILING/MEP 2 PSF

3. WIND LOADS:

    - ULTIMATE DESIGN WIND SPEED, V_{ULT} = 115
    - NOMINAL DESIGN WIND SPEED, V_{ASD} = 90
    - RISK CATEGORY: II
    - EXPOSURE C
    - INTERNAL PRESSURE COEFFICIENT = 0.0

    SEE COMPONENT AND CLADDING DESIGN WIND PRESSURE DIAGRAM

4. EARTHQUAKE LOADS:

    - RISK CATEGORY: II
    - SEISMIC IMPORTANCE FACTOR: I = 1.00
    - SHORT PERIOD MAPPED SPECTRAL RESPONSE COEFFICIENT, S_S = 0.207
    - 1 SECOND PERIOD MAPPED SPECTRAL RESPONSE COEFFICIENT, S1 = 0.094
    - SITE CLASS D
    - SHORT PERIOD DESIGN SPECTRAL RESPONSE COEFFICIENT, SD_S = 0.221
    - 1 SECOND PERIOD DESIGN SPECTRAL RESPONSE COEFFICIENT, SD1 = 0.151
    - SEISMIC DESIGN CATEGORY: C
    - BASIC SEISMIC-FORCE RESISTING SYSTEM: ORDINARY REINFORCED MASONRY SHEAR WALLS
    - DESIGN BASE SHEAR: 9.0 KIPS
    - SEISMIC RESPONSE COEFFICIENT, C_S = 0.11
    - RESPONSE MODIFICATION FACTOR, R = 2
    - ANALYSIS PROCEDURE: EQUIVALENT LATERAL FORCE PROCEDURE

5. UNLESS NOTED OTHERWISE CALCULATED INDIVIDUAL MEMBER DEFLECTIONS (IN INCHES) DO NOT EXCEED THE FOLLOWING:

	DEAD LOAD	LIVE LOAD	DEAD + LIVE LOAD
ROOF MEMBERS:	L/360	L/360	L/240

    5.1. WHERE, L = SPAN LENGTH (IN INCHES) BETWEEN SUPPORTS. (FOR CANTILEVERS, L IS TWICE THE LENGTH OF THE CANTILEVER.) NOTE THAT THE TOTAL MAXIMUM CALCULATED FLOOR SYSTEM DEFECTION WILL BE THE SUM OF THE DEFLECTIONS OF THE SUPPORTED ELEMENTS IN A BAY.

    5.2. THE CALCULATED DEFLECTION FOR INDIVIDUAL MEMBERS SUPPORTING MASONRY DO NOT EXCEED L/600 FOR DESIGN LOADS APPLIED AFTER THE INSTALLATION OF THE MASONRY.

6. SPECIAL INSPECTIONS:

    6.1. THE STRUCTURAL TESTING/INSPECTION AGENCY, SEE SPECIFICATION SECTION 014525, WILL PERFORM SPECIAL INSPECTIONS AS REQUIRED BY CHAPTER 17 OF THE BUILDING CODE. MATERIALS AND WORK TO BE INSPECTED INCLUDE SOILS AND MASONRY CONSTRUCTION. SEE SPECIFICATION SECTIONS 014525 FOR A COMPLETE LIST OF WORK REQUIRING SPECIAL INSPECTIONS.

    6.2. SPECIAL INSPECTION AS REQUIRED BY CHAPTER 17 OF THE BUILDING CODE ARE REQUIRED FOR STRUCTURAL COMPONENTS AND ASSEMBLIES WHICH ARE NOT FABRICATED AT THE CONSTRUCTION JOB SITE INCLUDING BUT NOT LIMITED TO FLOOR AND ROOF TRUSSES AND JOISTS OF WOOD AND STEEL MATERIALS, STRUCTURAL STEEL FRAMING, AND PRECAST CONCRETE, JOISTS, BEAMS, COLUMNS, SLABS, WALLS AND CLADDING.

    6.3. SPECIAL INSPECTION AS REQUIRED BY CHAPTER 17 OF THE BUILDING CODE MAY BE WAIVED FOR ITEMS WHICH ARE PRODUCED ON THE PREMISES OF A FABRICATOR REGISTERED AND APPROVED TO PERFORM SUCH WORK WITHOUT SPECIAL INSPECTION. APPROVAL SHALL BE BASED UPON REVIEW OF THE FABRICATOR'S WRITTEN PROCEDURAL AND QUALITY CONTROL MANUALS AND BY PERIODIC AUDITING OF FABRICATION PRACTICES BY AN APPROVED SPECIAL INSPECTION AGENCY. THE APPROVED FABRICATOR SHALL SUBMIT A CERTIFICATE OF COMPLIANCE TO THE CHIEF COMMERCIAL BUILDING INSPECTOR OR HIS DESIGNEE WHICH STATES THAT THE FABRICATION WORK WAS PERFORMED IN ACCORDANCE WITH THE APPROVED CONSTRUCTION DOCUMENTS.

    6.4. THE PROJECT OWNER WILL EMPLOY ONE OR MORE SPECIAL INSPECTORS TO PERFORM INSPECTIONS AS REQUIRED BY CHAPTER 17 OF THE BUILDING CODE DURING CONSTRUCTION OF THE PROJECT. DOCUMENTATION THAT SUMMARIZES THE QUALIFICATION AND CREDENTIALS OF EACH SPECIAL INSPECTOR AND DEMONSTRATES COMPETENCE FOR INSPECTION OF EACH PARTICULAR TYPE OF CONSTRUCTION REQUIRING SPECIAL INSPECTION SHALL BE SUBMITTED TO THE CHIEF COMMERCIAL BUILDING INSPECTOR OR HIS DESIGNEE FOR REVIEW AND APPROVAL PRIOR TO CONSTRUCTION.

    6.5. APPROVED SPECIAL INSPECTORS SHALL FURNISH INSPECTION REPORTS TO THE CHIEF COMMERCIAL BUILDING INSPECTOR OR HIS DESIGNEE AND TO THE DESIGN PROFESSIONAL WHICH INDICATE THAT THE WORK INSPECTED WAS DONE IN CONFORMANCE WITH THE APPROVED CONSTRUCTION DOCUMENTS. A FINAL REPORT WHICH DOCUMENTS THE RESULTS OF THE SPECIAL INSPECTIONS PERFORMED INCLUDING CORRECTION OF ANY DISCREPANCIES IDENTIFIED DURING INSPECTION SHALL BE SUBMITTED PERIODICALLY AT A FREQUENCY APPROVED BY CHIEF COMMERCIAL BUILDING INSPECTOR PRIOR TO CONSTRUCTION.

7. NO PROVISIONS HAVE BEEN MADE FOR FUTURE HORIZONTAL OR VERTICAL EXPANSION.

FOUNDATION

1. FOUNDATION DESIGN IS BASED ON THE RECOMMENDATIONS IN THE GEOTECHNICAL REPORT PREPARED BY FREIBERG GEOTECHNICAL, INC, DATED July 16, 2018. DESIGN PROFESSIONAL IS NOT RESPONSIBLE FOR SUBSURFACE CONDITIONS ENCOUNTERED IN THE FIELD DIFFERENT TO THOSE ASSUMED FOR DESIGN.

2. STRUCTURAL TESTING/INSPECTION AGENCY SHALL CERTIFY THE BEARING MEDIUM.

3. INDIVIDUAL SPREAD FOOTINGS AND CONTINUOUS FOOTINGS SHALL BEAR ON SOIL CAPABLE OF SUPPORTING 2,000 PSF, RESPECTIVELY.

    3.1. NO FOOTINGS SHALL BEAR ON ROCK. UNDERCUT ROCK A MINIMUM OF 2 FEET BELOW BOTTOM OF FOOTING AND REPLACE WITH STRUCTURAL FILL.

4. PROOF ROLL BUILDING AREAS WITH TWO COMPLETE COVERAGES OF A LOADED DUMP-TRUCK OR SCRAPER. REPLACE SOFT AREAS WITH COMPACTED STRUCTURAL FILL AS REQUIRED BY THE SPECIFICATIONS.

5. STRUCTURAL FILL SHALL CONTAIN NO ORGANIC MATERIAL AND BE APPROVED BY A GEOTECHNICAL ENGINEER PRIOR TO PLACEMENT. STRUCTURAL FILL UNDER SLABS AND WITHIN 10'-0" OF THE BUILDING FOOTPRINT SHALL BE PLACED IN LIFTS OF THICKNESS DETERMINED BY THE INDEPENDENT TESTING AGENCY AND COMPACTED TO AT LEAST 95% OF ITS STANDARD PROCTOR MAXIMUM DRY DENSITY IN ACCORDANCE WITH ASTM D698. THE TOP 12" SUB-BASE UNDER SLABS ON GRADE SHALL BE COMPACTED TO AT LEAST 98% OF ITS STANDARD PROCTOR MAXIMUM DRY DENSITY. ALL BACKFILL, COMPACTION AND PROOF ROLLING OPERATIONS SHALL BE OBSERVED BY AN INDEPENDENT TESTING LABORATORY.

6. SLABS-ON-GRADE SHALL BE PLACED ON A 4" GRANULAR BASE, COMPACTED TO 98% OF ITS STANDARD PROCTOR MAXIMUM DRY DENSITY IN ACCORDANCE WITH ASTM D698, AND COVERED WITH A 10 MIL CONTINUOUSLY SEALED VAPOR BARRIER. THE BASE FOR SLABS-ON-GRADE SHALL BE INSPECTED BY A GEOTECHNICAL ENGINEER PRIOR TO EACH PLACEMENT OF CONCRETE.

7. FOOTINGS SHALL BE CENTERED ABOUT COLUMN LINES UNLESS NOTED OTHERWISE.

8. ALL FOOTINGS AND TURN DOWN SLAB EDGES SHALL PENETRATE TO A MINIMUM DEPTH OF 12" BELOW FINISHED GRADE.

REINFORCEMENT

1. REINFORCING STEEL SHALL CONFORM TO ASTM A615, GRADE 60, UNLESS NOTED OTHERWISE.

2. WELDED WIRE FABRIC SHALL CONFORM TO ASTM A1064 AND HAVE MINIMUM SIDE AND END LAPS OF 8".

3. SUBMIT SHOP DRAWINGS WHICH ADEQUATELY DEPICT THE REINFORCING BAR SIZES AND PLACEMENT. WRITTEN DESCRIPTION OF REINFORCEMENT WITHOUT ADEQUATE SECTIONS, ELEVATIONS, AND DETAILS IS NOT ACCEPTABLE.

4. SPLICES SHALL BE CLASS B IN ACCORDANCE WITH ACI 318, UNLESS NOTED OTHERWISE. REINFORCEMENT SHALL BE SPLICED ONLY AT LOCATIONS SHOWN OR NOTED IN THE STRUCTURAL DOCUMENTS, EXCEPT REINFORCEMENT MARKED "CONTINUOUS" CAN BE SPLICED AT LOCATIONS DETERMINED BY CONTRACTOR. SPLICES AT OTHER LOCATIONS SHALL BE APPROVED IN WRITING BY THE DESIGN PROFESSIONAL.

5. PROVIDE DOWELS FROM FOUNDATIONS THE SAME SIZE AND NUMBER AS THE VERTICAL WALL OR COLUMN REINFORCING, UNLESS NOTED OTHERWISE.

6. PLACE REINFORCEMENT AS FOLLOWS, UNLESS NOTED OTHERWISE:

    6.1. CONCRETE REINFORCEMENT COVER

    EXPOSED TO EARTH OR WEATHER:
    UNFORMED CAST AGAINST EARTH 3" CLEAR
    FORMED #6 AND LARGER 2" CLEAR
    FORMED #5 AND SMALLER 1-1/2" CLEAR

    NOT EXPOSED TO EARTH OR WEATHER:
    SLABS 3/4" CLEAR

    6.2. MASONRY REINFORCING STEEL SHALL BE PLACED IN THE CENTER OF THE WALL UNLESS NOTED OTHERWISE.

7. REINFORCING STEEL DESIGNATED CONTINUOUS SHALL BE LAPPED AS FOLLOWS:

    CONCRETE REINFORCEMENT: CLASS B TENSION LAP

    MASONRY REINFORCEMENT: 48 BAR DIAMETERS

8. ADHESIVE FOR REINFORCING DOWELS IN EXISTING CONCRETE SHALL CONFORM TO ASTM C881-02, TYPE IV, GRADE 3, CLASS A, B, & C EXCEPT GEL TIMES AND EPOXY CONTENT. ADHESIVE SHALL CONSIST OF A TWO COMPONENT ADHESIVE SYSTEM CONTAINED IN SIDE BY SIDE PACKAGING CONNECTEED TO A MIXING NOZZLE WHICH THOROUGHLY MIXES THE COMPONENTS AS IT IS INJECTED INTO THE HOLE. ADHESIVE SHALL HAVE PASSED ICC EVALUATION SERVICES, INC (ICC-ES) ACCEPTANCE CRITERIA 308 FOR LONG TERM CREEP. REINFORCING INSTALLED IN CONCRETE THAT MAY BECOME CRACKED UNDER SERVICE LOADS SHALL BE EVALUATED BY ICC-ES ACCEPTANCE CRITERIA 308 AND BE SPECIFICALLY APPROVED FOR USE IN CRACKED CONCRETE. CONTACT DESIGN PROFESSIONAL FOR DETERMINATION OF CRACKED OR UNCRACKED CONCRETE CONDITION UNLESS CONDITION IS NOTED ON THE DRAWINGS. INSTALL IN ACCORDANCE WITH THE MANUFACTURER'S RECOMMENDATIONS. MINIMUM EMBEDMENT LENGTH SHALL BE 12 BAR DIAMETERS, UNLESS NOTED OTHERWISE.

9. ALL DOWELS AND TERMINATING BARS SHALL HAVE A STANDARD 90 DEGREE HOOK.

10. ALL HORIZONTAL REINFORCING SHALL BE CONTINUOUS THROUGH CONTROL AND/OR CONSTRUCTION JOINTS AND AROUND CORNERS.

CAST-IN-PLACE CONCRETE

1. CONCRETE WORK SHALL CONFORM TO ACI 318 AND CRSI STANDARDS.

2. CONCRETE SHALL HAVE THE FOLLOWING MINIMUM SPECIFIED 28-DAY COMPRESSIVE STRENGTH:

    2.1. NORMAL WEIGHT STRUCTURAL CONCRETE:

    FOOTINGS 3000 PSI
    SLABS-ON-GRADE 4000 PSI

3. PIPES OR DUCTS SHALL NOT EXCEED ONE-THIRD THE SLAB OR WALL THICKNESS INCLUDING CROSSING UNLESS SPECIFICALLY DETAILED IN THE STRUCTURAL DOCUMENTS. ALL PIPES AND DUCTS SHALL BE PLACED IN THE MIDDLE THIRD OF THE SLAB OR WALL THICKNESS UNLESS SPECIFICALLY DETAILED OTHERWISE IN THE STRUCTURAL DOCUMENTS. SEE MECHANICAL AND ELECTRICAL DRAWINGS FOR LOCATION OF SLEEVES, ACCESSORIES, ETC.

4. REFER TO ARCHITECTURAL DRAWINGS FOR MOLDS, GROOVES, ORNAMENTS, CLIPS OR GROUNDS REQUIRED TO BE ENCASED IN CONCRETE AND FOR LOCATION OF FLOOR FINISHES AND SLAB DEPRESSIONS.

5. CONSTRUCTION JOINT LOCATIONS SHALL BE APPROVED BY THE DESIGN PROFESSIONAL. NO HORIZONTAL CONSTRUCTION JOINTS ARE PERMITTED EXCEPT THOSE SHOWN ON THE STRUCTURAL DRAWINGS.

6. DEFECTIVE AREAS IN CONCRETE INCLUDING, BUT NOT LIMITED TO, HONEY-COMBING, SPALLS, AND CRACKS WITH WIDTHS EXCEEDING 0.016 INCH SHALL BE REPAIRED. EXTENT OF DEFECTIVE AREA TO BE DETERMINED BY THE DESIGN PROFESSIONAL.

7. CONCRETE MIX DESIGN FOR 3000 PSI CONCRETE SHALL BE BASED ON A MAXIMUM AGGREGATE SIZE OF 1 IN. MAXIMUM WATER/CEMENT RATIO OF .50 FOR NON-AIR-ENTRAINED CONCRETE AND .45 FOR AIR-ENTRAINED CONCRETE AND A MAXIMUM SLUMP OF 5 IN. AIR ENTRAINED CONCRETE SHALL BE USED FOR EXTERIOR EXPOSED CONCRETE WITH AN AIR CONTENT BETWEEN 3 AND 6 PERCENT, UNO.

8. CONCRETE SLABS ON GRADE SHALL NOT BE LOADED UNTIL A MINIMUM CONCRETE STRENGTH OF 1800 PSI HAS BEEN ATTAINED AND THE CONCRETE IS AT LEAST THREE DAYS OLD. ALL OTHER CONCRETE MEMBERS SHALL NOT BE LOADED UNTIL THE SPECIFIED CONCRETE DESIGN STRENGTH HAS BEEN ATTAINED.

9. CONCRETE SHALL BE TESTED IN ACCORDANCE WITH ACI 301 AND THE SPECIFICATIONS FOR COMPLIANCE WITH THE CONTRACT DOCUMENTS. AT A MINIMUM CONCRETE SPECIMENS SHALL BE TAKEN FOR EVERY 100 YARDS OR PORTION THEREOF FOR EACH MIX DESIGN PLACED IN A DAY. CONCRETE TEST REPORTS SHALL BE AVAILABLE ON SITE FOR INSPECTION.

10. C.J. ON THE SLAB AND FOUNDATION PLAN INDICATES A KEY-FORMED CONSTRUCTION JOINT OR SAW-CUT CONTROL JOINT IN THE CONCRETE SLAB ON GRADE. SAW-CUT CONTROL JOINTS SHALL BE INSTALLED WITHIN 12 HOURS OF SLAB PLACEMENT. CONTINUE REINFORCEMENT THROUGH JOINTS. CONSTRUCTION AND/OR CONTROL JOINTS SHALL BE SPACED NO FARTHER APART THAN 48 TIMES THE SLAB THICKNESS OC IN EACH DIRECTION CREATING PANELS WITH AN ASPECT RATIO NOT GREATER THAN 2:1.

11. UNLESS NOTED OTHERWISE, ALL REINFORCING SHALL BE CONTACT LAP SPLICED WITH A CLASS B SPLICE IN ACCORDANCE WITH ACI 318-05. FOR BARS WITH MINIMUM COVER AND SPACING GREATER THAN 2db AND 3db RESPECTIVELY, THE MINIMUM SPLICE LENGTH OF NOT LESS THAN 48db (db=BAR DIAMETER) SHALL BE USED. SPLICE LENGTHS SHALL BE INCREASED BY A FACTOR OF 1.3 FOR TOP REINFORCEMENT. LAP WELDED WIRE FABRIC (WWF) ONE SPACE PLUS 2 IN. ON ALL SIDES AT SPLICES.

12. ALL EXPOSED CORNERS OF CONCRETE SHALL HAVE A CHAMFER OR RADIUS OF 3/4", UNLESS NOTED OTHERWISE.

13. CONCRETE SHALL RECEIVE THE FOLLOWING FINISHES:

    13.1.INTERIOR EXPOSED SLABS (UNO OR REQUESTED BY THE OWNER): STEEL TROWEL FINISH

    13.2.FLOOR QUALITY CLASSIFICATION:
    "CONVENTIONAL" FF/FL = 25/20 (CARPETED OFFICE)
    "FLAT" FF/FL = 36/20 (THIN-SET CTOR VCT)

    13.3.EXTERIOR SLABS: BROOM FINISH IN DIRECTION OF SLOPE

14. ALL OTHER CONCRETE: STEEL TROWEL FINISH

15. MAINTAIN CONCRETE AFTER PLACEMENT WITH MINIMAL MOISTURE LOSS AT RELATIVELY CONSTANT TEMPERATURE FOR THE PERIOD NECESSARY FOR HYDRATION OF CEMENT AND HARDENING OF CONCRETE (NOT LESS THAN 7 DAYS). COMPLY WITH THE REQUIREMENTS OF ACI 308- STANDARD PRACTICE FOR CURING CONCRETE; AMERICAN CONCRETE INSTITUTE. A COMBINATION CURING AND SEALING COMPOUND SHALL BE APPLIED AFTER THE CONCRETE HAS BEEN FINISHED OR THE FORMS REMOVED. COMPOUND SHALL MEET THE REQUIREMENTS OF ASTM C1315.

CONCRETE MASONRY

1. MINIMUM 28-DAY COMPRESSIVE STRENGTH OF CONCRETE MASONRY SHALL BE F'M = 1500 PSI.

2. MORTAR SHALL COMPLY WITH THE BUILDING CODE REQUIREMENTS FOR CONCRETE MASONRY AND SHALL BE OF THE FOLLOWING TYPE:

    WALLS BELOW GRADE TYPE M
    BEARING WALLS TYPE M OR S

3. CONCRETE MASONRY UNITS SHALL BE GROUTED WITH 2500 PSI COARSE GROUT AS SHOWN IN THE STRUCTURAL DOCUMENTS. GROUT FOR REINFORCED AND NONREINFORCED MASONRY SHALL CONFORM TO ASTM C476.

4. PROVIDE HORIZONTAL JOINT REINFORCEMENT WITH NO. 9 GAGE LONGITUDINAL WIRES AT 16" C/C VERTICALLY, UNLESS NOTED OTHERWISE. PROVIDE SPECIAL ACCESSORIES FOR CORNERS, INTERSECTIONS, ETC.

5. PROVIDE OPEN BOTTOM BEAM BLOCK UNITS WITH 3" DEEP MINIMUM WEB OPENINGS AT HORIZONTAL REINFORCEMENT LOCATIONS. A MINIMUM CLEAR SPACE OF ONE BAR DIAMETER SHALL BE PROVIDED BETWEEN THE REINFORCING BARS AND THE FACE OF MASONRY UNITS.

6. PROVIDE CONTROL JOINTS IN ALL CONCRETE MASONRY WALLS AT LOCATIONS APPROVED BY THE DESIGN PROFESSIONAL AT A MAXIMUM SPACING OF 3 TIMES THE WALL HEIGHT OR 40'-0", WHICHEVER IS LESS.

7. PROVIDE DOVETAIL ANCHORS AT 16" C/C, UNLESS NOTED OTHERWISE, WHERE MASONRY WALLS ABUT CONCRETE SURFACES.

8. SUBMIT WRITTEN CONSTRUCTION PROCEDURES PRIOR TO THE START OF MASONRY CONSTRUCTION.

9. MINIMUM VERTICAL WALL REINFORCEMENT SHALL BE #5@32" C/C, UNLESS NOTED OTHERWISE.

10. SUBMIT SHOP DRAWINGS FOR MASONRY REINFORCEMENT IN ACCORDANCE WITH SPECIFICATION SECTION 032000.

STRUCTURAL STEEL

1. STRUCTURAL STEEL SHALL CONFORM TO ASTM A992, UNLESS NOTED OTHERWISE.

    - STRUCTURAL CHANNELS, MISCELLANEOUS PLATES AND CONNECTION MATERIAL SHALL CONFORM TO ASTM A36, UNLESS NOTED OTHERWISE.

2. BOLTS AND ANCHORS:

    2.1. ANCHOR BOLTS SHALL BE HEADED BOLTS CONFORMING TO ASTM F1554 AND SHALL BE HEADED RODS OR THREADED RODS WITH HEAVY HEXAGONAL NUT WELDED TO THE BOTTOM OF THE THREADED ROD, GRADE A36, UNLESS NOTED OTHERWISE.

    2.2. ANCHOR BOLTS SECURING WOOD PLATES SHALL BE PROVIDED WITH 1/4"x2-1/2"x2 1/2" BEARING PLATE BP 5/8" BY SIMPSON STRONG-TIE COMPANY INC. ANCHOR BOLTS FOR SILL PLATES SHALL BE EMBEDDED A MINIMUM OF 6 IN. FOR CONCRETE AND 8 IN. FOR MASONRY.

3. STRUCTURAL STEEL SHALL BE FABRICATED AND ERECTED ACCORDING TO BOTH THE AISC "SPECIFICATION FOR STRUCTURAL STEEL BUILDINGS" AND THE AISC "CODE OF STANDARD PRACTICE FOR STEEL BUILDINGS AND BRIDGES".

4. SUBMIT SHOP DRAWINGS WHICH ADEQUATELY DEPICT THE STRUCTURAL ELEMENTS AND CONNECTIONS SHOWN IN THE CONTRACT DOCUMENTS. CONNECTIONS SHALL BE DETAILED BASED ON THE DESIGN INFORMATION PROVIDED IN THE CONTRACT DOCUMENTS.

5. USE PRE-QUALIFIED WELDED JOINTS IN ACCORDANCE WITH AISC AND THE STRUCTURAL WELDING CODE OF THE AMERICAN WELDING SOCIETY. "NON-PRE-QUALIFIED JOINTS" SHALL BE QUALIFIED PRIOR TO FABRICATION.

6. STRUCTURAL STEEL EXPOSED TO WEATHER SHALL BE GALVANIZED.

wright gardner architect llc
154 Krog Street, #125
Atlanta, GA 30307
404-218-8460

SHEAR STRUCTURAL
931 MONROE DRIVE
SUITE A102-491
ATLANTA, GA 30308
(678) 964-8051
SHEARSTRUCTURAL.COM

ARCADE CITY PARK
PHASE 1 IMPROVEMENTS

ARCADE, GEORGIA

stamp:

revisions

No.	Description	Date

sheet title:

STRUCTURAL GENERAL NOTES

project number: 17-053
drawing date: 02.06.2019
scale as noted

sheet number:

S0-01

☐ NOT ISSUED FOR CONSTRUCTION
■ ISSUED FOR CONSTRUCTION

WOOD

1. WOOD FRAMING SHALL BE SOUTHERN PINE, NO. 2 K.D. (15% MAX. MOISTURE CONTENT) OR EQUIVALENT. MINIMUM ALLOWABLE BENDING STRESS SHALL BE PER NDS 2013 ADDENDUM.

2. WOOD POSTS SHALL BE SOUTHERN PINE DENSE SELECT STRUCTURAL GRADE (15% MAX. MOISTURE CONTENT) OR EQUIVALENT. MINIMUM ALLOWABLE BENDING STRESS SHALL BE 1,750 PSI.

3. WOOD TRUSSES SHALL BE CAPABLE OF SUPPORTING THE SUPERIMPOSED LOADS AS GIVEN IN THE CONTRACT DOCUMENTS.

4. CONNECTIONS FOR STRUCTURAL TIMBER SHALL BE GALVANIZED STRONG-TIE CONNECTORS BY THE SIMPSON COMPANY OR APPROVED EQUAL.

5. WOOD IN CONTACT WITH CONCRETE OR MASONRY SHALL BE FOUNDATION GRADE PRESSURE-TREATED SOUTHERN PINE. USE GALVANIZED NAILS IN PRESSURE-TREATED WOOD.

6. PLYWOOD DIAPHRAGMS SHALL BE EITHER STRUCTURAL I OR II SOUTHERN PINE PLYWOOD WITH THICKNESS AS NOTED IN THE STRUCTURAL DOCUMENTS. PLYWOOD SHALL CONFORM TO THE REQUIREMENTS OF THE BUILDING CODE.

7. PLYWOOD SHALL BE ORIENTED AND NAILED TO SUPPORTING MEMBERS AS NOTED IN THE STRUCTURAL DOCUMENTS.

8. GENERAL

   8.1. FOR FIRE RATING REQUIREMENTS OF COMPONENTS AND ASSEMBLIES, SEE ARCHITECTURAL DRAWINGS.

   8.2. LUMBER IN CONTACT WITH CONCRETE AND OR MASONRY SHALL BE PRESSURE TREATED IN ACCORDANCE WITH AWPB LP-2.

   8.3. EXTERIOR LUMBER SHALL BE A MINIMUM OF 8" ABOVE FINISHED GRADE.

9. TREATED WOOD PRODUCTS

   9.1. ALL EXPOSED EXTERIOR LUMBER SHALL RECEIVE PRESERVATIVE PRESSURE TREATMENT FOR PROTECTION FROM DECAY AND TERMITES IN ACCORDANCE WITH CCA TYPE 3 PRESERVATIVE IN ACCORDANCE WITH AWPA STANDARDS P5 AND C1 AS WELL AS THE FOLLOWING STANDARDS:

LUMBER	C2
PLYWOOD	C9
BUILDING POLES & POSTS	C23

   THE MINIMUM PRESERVATIVE RETENTION SHALL BE IN ACCORDANCE WITH THE FOLLOWING:

ABOVE GROUND APPLICATIONS	0.25 PCF

   9.2. ALL DECKING AND RAILING SHALL ALSO BE PRESSURE TREATED WITH A CCA COMPATIBLE WATER REPELLENT SO THAT TREATED WAFERS SWELL NOT MORE THAN 1% AFTER FIVE MINUTES OF SUBMERSION, WHEN TESTED IN ACCORDANCE WITH AWPA'S STANDARD TEST METHOD, E13-92.

   9.3. TREATED MATERIAL SHALL BE DRIED AFTER TREATMENT TO A MOISTURE CONTENT OF NOT MORE THAN 19% FOR LUMBER AND 15% FOR PLYWOOD.

   9.4. ALL FIELD CUTS SHALL BE FIELD TREATED IN ACCORDANCE WITH AWPA STANDARD M4.

10. SAWN LUMBER SHALL BE PROVIDED IN ACCORDANCE WITH THE NATIONAL DESIGN SPECIFICATION FOR WOOD CONSTRUCTION, 1991 EDITION, BY THE AMERICAN FOREST AND PAPER ASSOCIATION.

    10.1. LUMBER GRADE AND SPECIES SHALL CONFORM WITH THE FOLLOWING:

    10.1.1. SOUTHERN PINE OR DOUGLAS FIR - #2 GRADE OR BETTER WITH MAXIMUM MOISTURE CONTENT OF 15% (UNO)

    10.2. HOLES IN JOISTS, RAFTERS, STUDS AND PLATES NOT EXCEEDING 1/5 THE DEPTH/WIDTH OF THE MEMBER AND NOT CLOSER THAN 3 TIMES THE DEPTH/WIDTH OF THE MEMBER FROM THE END ARE PERMITTED AT THE MID-DEPTH/WIDTH OF THE MEMBER ONLY.

    10.3. BRIDGING, FULL DEPTH SOLID BLOCKING, OR CROSS BRACING SHALL BE INSTALLED AT INTERVALS NOT EXCEEDING 8 FT OC WHEN THE DEPTH TO BREADTH RATIO OF SAWN JOISTS AND RAFTERS EXCEEDS 6 TO 1.

11. PLYWOOD SHALL BE PROVIDED IN ACCORDANCE WITH THE RECOMMENDATIONS OF THE AMERICAN PLYWOOD ASSOCIATION (APA). THE MINIMUM THICKNESSES WHICH FOLLOW SHALL BE INCREASED AS REQUIRED TO SATISFY ARCHITECTURAL REQUIREMENTS.

    11.1. ROOF SHEATHING SHALL BE APA RATED SHEATHING, EXPOSURE 1, 48"x96". FOR SUPPORTS 16" OC USE 5/8" 24/16 PLYWOOD. PLYWOOD SHALL BE TONGUE AND GROOVE OR BE INSTALLED WITH PANEL CLIPS IN ACCORDANCE WITH APA RECOMMENDATIONS. WHERE ALLOWABLE SPANS ARE EXCEEDED AT ROOF SLOPE TRANSITIONS, PROVIDE SPECIALLY DESIGNED SUPPLEMENTAL MEMBERS AS REQUIRED. SHEATHING SHALL BE INSTALLED WITH THE LONG EDGE ACROSS A MINIMUM OF THREE SUPPORTING MEMBERS. SUPPORT AND STAGGER EDGES OF PLYWOOD PARALLEL TO SUPPORTING MEMBER. PROVIDE CONTINUOUS BLOCKING AT PERIMETER OF EACH DIAPHRAGM PLANE (INCLUDING ROOF SLOPE TRANSITIONS) AND AROUND OPENINGS. FASTEN SHEATHING WITH 8d NAILS AT 6" OC AT SUPPORTED EDGES UNO AND AT 12" OC AT INTERMEDIATE SUPPORTS. AN 1/8" GAP SHALL BE LEFT BETWEEN ADJACENT PANELS. PROTECT EDGES AGAINST EXPOSURE TO WEATHER OR USE EXTERIOR GRADE PLYWOOD. COVER SHEATHING AS SOON AS POSSIBLE WITH ROOFING FELT OR SHINGLE UNDERLAYMENT FOR PROTECTION AGAINST EXCESSIVE MOISTURE PRIOR TO ROOFING INSTALLATION.

12. FASTENING SCHEDULE SHALL BE IN ACCORDANCE WITH TABLE 2304.9.1 IN THE INTERNATIONAL BUILDING CODE, 2012 EDITION, UNLESS OTHERWISE SPECIFIED.

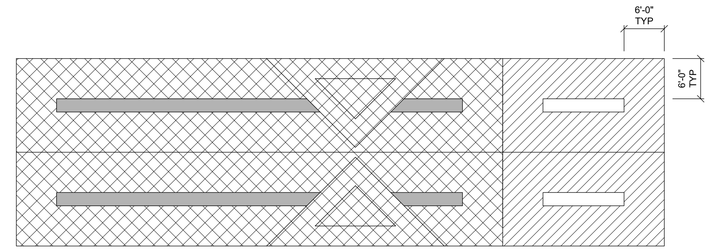

ROOF PLAN COMPONENTS AND CLADDING
ULTIMATE WIND PRESSURE DIAGRAM

= -27 PSF/+26 PSF

= -32 PSF/+26 PSF

= -52 PSF/+54 PSF

= -79 PSF/+81 PSF

NOTE: WIND PRESSURE BASED ON 25 SQUARE FOOT AREA.
NEGATIVE INDICATES PRESSURE AWAY FROM SURFACE

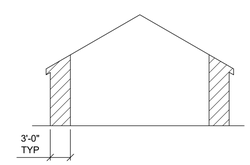

WALL ELEVATION COMPONENTS AND CLADDING
ULTIMATE WIND PRESSURE DIAGRAM

= -29 PSF/+26 PSF

= -33 PSF/+26 PSF

NOTE: WIND PRESSURE BASED ON 50 SQUARE FOOT AREA.
NEGATIVE INDICATES PRESSURE AWAY FROM SURFACE

wright gardner architect llc

154 Krog Street, #125
Atlanta, GA 30307
404-218-8460

SHEAR STRUCTURAL
931 MONROE DRIVE
SUITE A102-491
ATLANTA, GA 30308
(678) 664-8051
SHEARSTRUCTURAL.COM

ARCADE CITY PARK
PHASE 1 IMPROVEMENTS

ARCADE, GEORGIA

stamp:

revisions

No.	Description	Date

sheet title:

STRUCTURAL GENERAL NOTES

project number: 17-053
drawing date: 02.06.2019
scale as noted

sheet number:

S0-02

☐ NOT ISSUED FOR CONSTRUCTION
■ ISSUED FOR CONSTRUCTION

SECTION 013330

STRUCTURAL SUBMITTALS

PART 1 - GENERAL

1.1 SECTION INCLUDES

A. Structural submittals include shop drawings, design calculations, diagrams, illustrations, schedules, performance charts, nomenclature charts, samples, brochures and other data prepared by the Contractor or any subcontractor, manufacturer, supplier, fabricator, or distributor and which illustrate some portion of the Project.

B. Submittals by the Contractor are not a part of the Contract Documents.

1.2 RELATED SECTIONS

A. Section 01 33 00 - Submittals

1.3 SUBMITTAL PROCEDURES

A. Prior to the initial submittal, Contractor shall submit to the Design Professional a completed *Submittal Information and Schedules* form given in Appendix I.

B. Submittals shall be accompanied by a transmittal letter with the following information:

1. Project name.
2. Contractor's name.
3. Date submitted.
4. Description of items submitted; identify work and product by Specification Section.
5. Number of drawings and other pertinent data.

C. Provide blank space on each submittal for the Design Professional's review stamp.

D. The type and number of submittals for each item shall be in accordance with Section 013000.

E. Contractor shall direct specific attention on the submittal to any deviation from the Contract Documents.

1.4 CONTRACTOR RESPONSIBILITY

A. Contractor shall make all submittals in advance of installation or construction to allow the Design Professional sufficient time for review.

B. Contractor shall stamp and sign each sheet of shop drawings and product data, and sign or initial each sample to certify compliance with requirements of Contract Documents. SUBMITTALS RECEIVED WITHOUT THE CONTRACTOR'S STAMP OF REVIEW WILL BE RETURNED TO THE CONTRACTOR FOR REVIEW AND RESUBMITTAL.

C. Contractor shall understand that the submittal of the required documents does not constitute compliance with the requirements of the Contract Documents; only submittals reviewed by the Design Professional constitute compliance.

D. It is the Contractor's responsibility to furnish equipment, materials, and labor for the Project which meets the requirements of the codes and authorities quoted as well as the Contract Documents. Proprietary items specified herein only establish a minimum functional and aesthetic standard and it is incumbent upon the Contractor to ascertain conformance of these proprietary items or any proposed substitution with the codes and authorities.

E. By reviewing, approving and submitting shop drawings, product data, or samples, Contractor thereby represents that he has determined and verified all field measurements, field construction criteria, materials, member sizes catalog numbers, and similar data and that he has checked and coordinated shop drawings with the requirements of the Project and of the Contract Documents.

F. Work requiring shop drawings, whether called for by the Contract Documents or requested by the Contractor, shall not commence until the submission has been reviewed by the Design Professional. Work may commence if the Contractor verifies the accuracy of the Design Professional's corrections and notations and complies with them without exception and without requesting change in Contract Sum or Contract Time.

1.5 DESIGN PROFESSIONAL REVIEW

A. Design Professional will review submittals with reasonable promptness.

B. Design Professional's review or corrections refer only to the general arrangement and conformance of the subject of the submittals with the design concept of the project and with the information given in the Contract Documents. Under no conditions should the Contractor consider the review to include the dimensions, quantities, and details of the items nor the approval of an assembly in which the item functions.

C. Design Professional's review shall not relieve the Contractor from responsibility for errors or omissions in the submittals.

D. Design Professional's review of submittals shall not relieve the Contractor of responsibility for any deviation from the requirements of the Contract Documents unless the Contractor has directed specific attention to the deviation at the time of submission and the Design Professional has given written approval to the specific deviation.

E. Design Professional's review of submittals shall not be construed as authorizing any change in the Contract Sum or Contract Time.

1.6 SHOP DRAWINGS

A. Present in a clear and thorough manner. Title each drawing with Project name and number; identify each element of drawings by reference to sheet number and detail of Contract Documents.

B. Reproduction of Structural Drawings for shop drawings is not permitted. Electronic drawing files will not be provided to the Contractor.

C. Identify field dimensions; show relationship to adjacent or critical features of Work or products.

D. A copy of the marked structural shop drawings with the Design Professional's review stamp is to be maintained at the job site.

1.7 PRODUCT DATA

A. Submit only pages which are pertinent; mark each copy of standard printed data to identify pertinent products, referenced to Specification Section and Article number. Show reference standards, performance characteristics, and capacities; wiring and piping diagrams and controls; component parts; finishes; dimensions; and required clearances.

B. Modify manufacturer's standard schematic drawings and diagrams to supplement standard information and to provide information specifically applicable to the work. Delete information which is not applicable.

C. Provide manufacturer's preparation, assembly, and installation instructions.

1.8 SAMPLES

A. Submit full range of manufacturer's standard finishes except where more restrictive requirements are specified, indicating colors, textures, and patterns.

B. Submit samples to illustrate functional characteristics of products, including parts and attachments as required by Design Professional.

C. Approved samples which are of proper size may be incorporated in Work.

D. Label each sample with identification.

E. Field Finishes: Provide full samples at Project, at location acceptable to Design Professional, as required by individual Specification Section. Install each sample complete and finished. Acceptable finishes in place may be retained in completed work.

1.9 RESUBMITTALS

A. When submittals are returned to the Contractor with the Design Professional's corrections the Contractor shall make the required corrections. Upon request, resubmit one corrected set.

B. Contractor shall direct specific attention on the resubmittal to all revisions including those requested by the Design Professional on previous submission.

1.10 DISTRIBUTION

A. Distribute reproductions of shop drawings, copies of product data, and samples which bear the Design Professional's review stamp to job site file, Record Documents file, subcontractors, suppliers, other affected contractors, and other entities requiring information.

B. Work shall be in accordance with and performed from the reviewed drawings.

PART 2 - PRODUCTS

Not Used.

PART 3 - EXECUTION

Not Used.

APPENDIX I
SUBMITTAL INFORMATION AND SCHEDULES

PROJECT _____

CONTRACTOR _____

CONTRACTOR'S ADDRESS _____

_____

PROJ. MANAGER _____ PHONE (___) _____ FAX (___) _____

SUPERINTENDENT _____ PHONE (___) _____ FAX (___) _____

MOBILIZATION DATE _____

PROJECTED SUBMITTAL DATES

FOUNDATION, CONCRETE & REINFORCING		STRUCTURAL STEEL		MASONRY	
SUBMITTAL	DATE	SUBMITTAL	DATE	SUBMITTAL	DATE
Site Preparation & Equipment Information				Grout & Mortar Mix	
Concrete Mix Design		Anchor Bolt & Embedded Items		Block Prism & Comp. Strength	
Foundation Reinforcing		Erection & Detail Drawings		Reinforcing	
				Written Procedures	
				WOOD	DATE
				Trusses	

Remarks:

COMPLETED BY _____ DATE _____

END OF APPENDIX I

SECTION 014525

STRUCTURAL TESTING/INSPECTION AGENCY SERVICES

PART 1 - GENERAL

1.1 SECTION INCLUDES

A. Section summarizes the responsibility of the Contractor and the Structural Testing/Inspection Agency in the performance of the testing/inspection specified in the Contract Documents.

B. Neither the observation of the Design Professional in the administration of the contract, nor tests/inspections by the Testing/Inspection Agency, nor approvals by persons other than the Design Professional shall relieve the Contractor from his obligation to perform the work in accordance with the Contract Documents.

1.2 RELATED SECTIONS

A. Section 013330 - Structural Submittals.

B. Section 014000 - Quality Control Services.

1.3 REFERENCES

A. ASTM D3740 - Practice for Evaluation of Agencies Engaged in Testing and/or Inspection of Soil and Rock as Used in Engineering Design and Construction.

B. ASTM E329 - Recommended Practice for Inspection and Testing Agencies for Concrete, Steel, and Bituminous Materials as Used in Construction.

C. American Council of Independent Laboratories - Recommended Requirements for Independent Laboratories Qualifications.

1.4 SELECTION AND PAYMENT

A. Owner will employ and pay for the structural testing/inspection services that are required by the Contract Documents.

B. Contractor shall pay for any additional structural testing/inspection required for work or materials not complying with Contract Documents due to negligence or nonconformance.

C. Contractor shall pay for any additional structural testing/inspection required for his convenience.

D. Qualifications: Minimum Special Inspector qualifications shall be per Table 1704.1 of 2010 Georgia State Amendments to the International Building Code (2012 Edition).

1.6 STRUCTURAL TESTING/INSPECTION REQUIREMENT SUMMARY

A. Specific structural testing/inspection requirements are given in the following specification sections:

Specification 03 1000 - Concrete Formwork Inspection
Specification 03 2000 - Concrete Reinforcement Inspection
Specification 03 3000 - Concrete Testing/Inspection
Specification 04 2200 - Masonry Testing/Inspection
Specification 06 1753 - Wood Truss Inspection
Specification 31 2301 - Excavating, Backfilling, and Compacting For Structures

1.7 STATEMENT OF SPECIAL INSPECTIONS

A. Provide testing/inspection required to meet the provisions of the Schedule of Special Inspection Services below.

PART 2 MATERIALS

Not Used.

PART 3 EXECUTION

3.1 STRUCTURAL PRECONSTRUCTION MEETING

A. A structural preconstruction meeting may be conducted at the construction site by the Design Professional to discuss quality issues. The parties involved may be the Design Professional, Contractor, Structural Testing/Inspection Agency, appropriate subcontractors, suppliers, and detailers.

3.2 STRUCTURAL TESTING/INSPECTION AGENCY'S RESPONSIBILITIES

A. Cooperate with the Contractor and provide timely service.

B. Upon arriving at the construction site, sign in and notify the Contractor of presence.

C. Select the representative samples that are to be tested/ inspected.

D. Perform tests/ inspections as outlined in Contract Documents, the applicable codes, and as directed by the Design Professional.

E. Report work and materials not complying with Contract Documents immediately to the Contractor and Design Professional.

F. Leave copies of field notes with the Contractor prior to leaving the construction site. Field notes shall include the message given to the Contractor, date, time of message, name of Contractor's representative informed, type and location of work or materials tested/inspected, whether the work or materials complies with Contract Documents and name of the Structural Testing/Inspection Agency's representative.

G. Report and distribute results of tests/inspections promptly in the form of written reports as directed by the Design Professional.

H. Structural Testing/Inspection Agency shall not alter requirements of Contract Documents, approve or reject any portion of the work, or perform duties of the Contractor.

3.3 CONTRACTOR'S RESPONSIBILITIES

A. Provide copy of Contract Documents to the Structural Testing/Inspection Agency.

B. Arrange the preconstruction meeting to discuss quality issues.

C. Notify the Structural Testing/Inspection Agency sufficiently in advance of operations to allow assignment of personnel and scheduling of tests.

D. Cooperate with Structural Testing/Inspection Agency and provide access to work.

E. Provide samples of materials to be tested in required quantities.

F. Furnish copies of mill test reports when requested.

G. Provide storage space for Structural Testing/Inspection Agency's exclusive use, such as for storing and curing concrete testing samples.

H. Provide labor to assist the Structural Testing/Inspection Agency in performing tests/inspections.

3.4 OPTIONS

A. If the Structural Testing/Inspection Agency is located at such a distance from the project that travel expenses will be a consideration, or if the amount of sampling performed is minor, and by mutual agreement of the Design Professional and Contractor, the Contractor may be requested to take samples and forward them to the Structural Testing/Inspection Agency for testing/inspection.

SECTION 031000

CONCRETE FORMWORK

PART 1 GENERAL

1.01 SECTION INCLUDES

A. Section includes the design and erection of formwork, shoring and reshoring for cast-in-place concrete and accessories.

1.02 RELATED SECTIONS

A. Section 013330 - Structural Submittals.

B. Section 032000 - Concrete Reinforcement.

C. Section 033000 - Cast-in-Place Concrete.

1.03 REFERENCES

A. ACI 117 - Standard Specifications for Tolerances for Concrete Construction and Materials.

B. ACI 301 - Standard Specifications for Structural Concrete.

C. ACI 318 - Building Code Requirements for Structural Concrete.

D. ACI 347 - Recommended Practice for Concrete Formwork.

E. ASTM D1751 - Standard Specification for Preformed Expansion Joint Filler for Concrete Paving and Structural Construction (Nonextruding and Resilient Bituminous Types).

F. ASTM E154 - Standard Test Methods for Water Vapor Retarders Used in Contact with Earth Under Concrete Slabs, on Walls, or as Ground Cover.

1.04 SUBMITTALS

A. Submit locations of construction joints for approval.

B. Submit manufacturer's data for formwork accessories, inserts, form release agent, and isolation joint filler.

1.05 DESIGN OF FORMWORK

A. Design of formwork, shoring, and reshoring and its removal is the Contractor's responsibility.

B. Design of formwork, shoring, and reshoring shall conform to ACI 117, ACI 301, ACI 318, and ACI 347.

C. Design formwork in a manner such that existing or new construction is not overloaded.

D. Do not remove shores or reshores earlier than recommended by ACI 301 and ACI 347.

PART 2 PRODUCTS

2.01 FORM MATERIALS

A. Construct forms with wood, plywood, metal, fiberglass or a combination of these.

B. Form materials shall have sufficient strength to prevent distortion.

2.02 FORMWORK ACCESSORIES

A. Formwork accessories that are embedded in concrete, including ties and hangers, shall be commercially manufactured products. Do not use nonfabricated wire form ties.

2.03 FORM RELEASE AGENT

A. Form release agent shall not bond with, stain, nor adversely affect concrete surfaces.

2.04 VAPOR BARRIER

A. Vapor barrier shall consist of polyethylene sheet, not less than ten mils thick.

2.05 ISOLATION JOINT FILLER

A. Asphalt impregnated premolded fiberboard isolation joint filler shall conform with ASTM D1751 and be 1/2-inch thick by full thickness of slab or joint, unless indicated otherwise on the Drawings.

2.06 CONSTRUCTION JOINTS

A. Provide key type steel forms by Vulcan screed joints, Burke Keyed Kold joint form or Form-A-Key.

PART 3 EXECUTION

3.01 GENERAL

A. Erect formwork in accordance with ACI 301, ACI 318, and ACI 347.

B. Maintain formwork and shoring to support loads until such loads can be supported by concrete structure.

3.02 TOLERANCES

A. Finished work shall comply with ACI 117 tolerances.

3.03 CAMBER

A. Camber formwork for slabs and beams to compensate for anticipated deflections in formwork prior to hardening of concrete to maintain tolerances specified by ACI 117.

B. Set screeds to a like camber to maintain specified concrete thickness.

3.04 SURFACE PREPARATION

A. For concrete exposed to view, seal form joints to prevent leakage.

B. Before reinforcement is placed, coat contact surfaces of form with form release agent in accordance with manufacturer's recommendations. Do not allow excess form release agent to accumulate in forms or come in contact with concrete surfaces against which fresh concrete will be placed.

3.05 CHAMFERS

A. Provide 3/4-inch chamfer at all corners.

3.06 FOUNDATION ELEMENTS

A. Form foundation elements if soil or other conditions are such that earth trench forms are unsuitable.

B. Sides of exterior turned-down slabs shall be formed.

C. Maintain minimum coverage of reinforcing steel as indicated on Structural Drawings.

3.07 INSERTS

A. Install and secure in position required inserts, hangers, sleeves, anchors, and nailers.

B. Locate anchor bolts by using templates with two nuts to secure in position.

3.08 EMBEDS

A. Set and secure embedded plates, bearing plates, and anchor bolts in accordance with approved setting drawings and in such a manner to prevent displacement during placement of concrete.

3.09 VAPOR BARRIER

A. Where indicated on Drawings, place vapor barrier over sewer, piping, and granular subbase, but below conduits and ducts, and behind insulation and expansion joints at sidewalls.

B. Lap vapor barrier six inches minimum at splices.

C. Do not puncture vapor barrier.

3.10 FORM REMOVAL

A. Remove forms carefully in such manner and at such time as to ensure complete safety of structure. Do not remove forms shoring, or reshoring until members have acquired sufficient strength to support their weight and the load thereon safely.

3.11 PROVISIONS FOR OTHER TRADES

A. Provide openings in concrete formwork to accommodate work of other trades. Determine size and location of openings and recesses from trades providing such items.

B. Accurately place and securely support items built into forms. Obtain approval for openings not shown on Drawings.

3.12 CLEANING

A. Thoroughly clean forms and adjacent surfaces to receive concrete. Remove chips, wood, sawdust, dirt or other debris just before concrete is placed.

3.13 FORM SURFACES

A. Coat contact surfaces of forms with a form coating compound before reinforcement is placed. Apply in accordance with manufacturer's recommendations. Rust-stained steel formwork is not acceptable.

3.14 CONSTRUCTION JOINTS

A. Provide construction joints in accordance with ACI 318.

B. Obtain Design Professional's prior approval for use and location of joints.

C. Provide 11/2 inch deep key type construction joints at end of each placement for slabs, beams, walls, and footings. Bevel forms for easy removal.

D. Remove loose particles and latency from surface prior to placing the next lift. Chip the surface to a depth sufficient to expose sound concrete.

END OF SECTION

wright gardner architect llc

154 Krog Street, #125
Atlanta, GA 30307
404-218-8460

SHEAR STRUCTURAL
931 MONROE DRIVE
SUITE A102-491
ATLANTA, GA 30308
(678) 964-8051
SHEARSTRUCTURAL.COM

ARCADE CITY PARK
PHASE 1 IMPROVEMENTS

ARCADE, GEORGIA

stamp:

revisions

No.	Description	Date

sheet title:

STRUCTURAL SPECIFICATIONS

project number: 17-053
drawing date: 02.06.2019
scale as noted

sheet number:

S0-03

☐ NOT ISSUED FOR CONSTRUCTION
■ ISSUED FOR CONSTRUCTION

SECTION 032000

CONCRETE REINFORCEMENT

PART 1 GENERAL

1.01 RELATED SECTIONS

A. Section 013330 - Structural Submittals.

B. Section 014525 - Structural Testing/Inspection Agency Services.

C. Section 031000 - Concrete Formwork.

D. Section 033000 - Cast-in-Place Concrete.

1.02 REFERENCES

A. ACI 117 - Standard Specifications for Tolerances for Concrete Construction and Materials.

B. ACI 301 - Standard Specifications for Structural Concrete.

C. ACI 315 - Details and Detailing of Concrete Reinforcement.

D. ACI 318 - Building Code Requirements for Structural Concrete.

E. ASTM A1064 - Standard Specification for Carbon-Steel Wire and Welded Wire Reinforcement, Plain and Deformed, for Concrete Reinforcement.

F. ASTM A615 - Standard Specification for Deformed and Plain Billet-Steel Bars for Concrete Reinforcement.

G. ASTM A706 - Standard Specification for Low-Alloy Steel Deformed Bars for Concrete Reinforcement.

H. AWS D12.1 - Recommended Practices for Welding Reinforcing Steel Metal Inserts, and Connections in Reinforced Concrete Construction.

I. AWS D1.4 - Structural Weld Code - Reinforcing Steel.

J. CRSI - Manual of Practice, and Documents 63 and 65.

1.03 SUBMITTALS

A. Submit shop drawings as follows:

1. Notify Design Professional prior to detailing reinforcing steel shop drawings.
2. Indicate size, spacings, locations and quantities of reinforcing steel and wire fabric, bending and cutting schedules, splice lengths, stirrup spacing, supporting and spacing devices. Detail reinforcing steel in accordance with ACI 315 and CRSI Standards.
3. Written description of reinforcement without adequate sections, elevations, and details is not acceptable.
4. Reproduction of Structural Drawings for shop drawings is not permitted. Electronic drawing files will not be provided to the Contractor.

B. Submit a certification from each manufacturer or supplier stating that materials meet the requirements of the ASTM and ACI standards referenced.

C. Submit mill test reports.

D. Submit manufacturer's data for tensile and compressive splicers.

E. Submit manufacturer's data including installation recommendations for dowel adhesive.

1.04 QUALITY ASSURANCE

A. Coordinate and schedule in a timely manner with the Structural Testing/Inspection Agency the following quality related items:

1. Verify reinforcing steel for quantity, size, location, and support.
2. Verify proper reinforcing steel concrete coverage.

B. The Structural Testing / Inspection Agency shall provide special inspections as required by Chapter 17 of the building code as required by Specification 01 4525.

1.05 STORAGE AND PROTECTING

A. Store reinforcing steel above ground so that it remains clean. Maintain steel surfaces free from materials and coatings which might impair bond.

PART 2 - PRODUCTS

2.01 MATERIALS

A. Deformed reinforcing steel shall conform to ASTM A615, refer to Structural Drawings for grade (Grade 60 minimum).

B. Welded steel wire fabric shall conform to ASTM A1064.

2.02 ACCESSORY MATERIALS

A. Annealed steel tie wire shall be 16-1/2 gage minimum.

B. Bar supports shall be plastic-tipped steel Class I bar supports conforming to CRSI Specifications. Concrete brick may be used to support reinforcement to obtain proper clearance from earth.

2.03 SPLICERS

A. Tensile splicers shall be capable of developing 125% of the reinforcing steel ASTM specified minimum yield strength.

B. Compression splicers shall be the mechanical type such that the compression stress is transmitted by end bearing held in concentric contact.

2.04 DOWEL ADHESIVE

A. Adhesive for reinforcing dowels in existing concrete shall conform to ASTM C881-13, Type IV, Grade 3, CLASS A, B, & C except gel times and epoxy content. Adhesive shall consist of a two component adhesive system contained in side by side packaging connected to a mixing nozzle which thoroughly mixes the components as it is injected into the hole. Adhesive shall have passed ICC Evaluation Services, Inc. Acceptance Criteria 308 for long term creep and be specifically approved for use in cracked concrete.

PART 3 EXECUTION

3.01 FABRICATION

A. Fabricate steel in accordance with ACI 318 and CRSI standards.

B. Bend bars cold. Do not heat or flame cut bars. No field bending of bars partially embedded in concrete is permitted, unless specifically approved Design Professional and checked by Testing and Inspection Agency for cracks.

C. Weld only as indicated. Perform welding in accordance with AWS D12.1 and or AWS D1.4.

D. Tag reinforcing steel for easy identification.

3.02 INSTALLATION

A. Before placing concrete, clean reinforcement of foreign particles and coatings.

B. Place, support, and secure reinforcement against displacement in accordance with ACI 318 and CRSI standards. Do not deviate from alignment or measurement.

C. Place concrete beam reinforcement support parallel to main reinforcement.

D. Locate welded wire fabric in the top third of slabs. Overlap mesh one lap plus two inches at side and end joints.

E. Furnish and install dowels or mechanical splices at intersections of walls, columns and piers to permit continuous reinforcement or development lengths at such intersections.

F. Maintain cover and tolerances in accordance with ACI and CRSI Specifications, unless indicated otherwise on Structural Drawings.

3.03 SPLICES

A. Do not splice reinforcement except as indicated on Structural Drawings.

B. Tension couplers may be used and installed in accordance with manufacturer's specifications.

3.04 DOWELS IN EXISTING CONCRETE

A. Install dowels and dowel adhesive in accordance with manufacturer's recommendations.

B. Minimum embedment length shall be 12 bar diameters, unless noted otherwise.

END OF SECTION

SECTION 033000

CAST-IN-PLACE CONCRETE

PART 1 GENERAL

1.01 SECTION INCLUDES

A. Section includes cast-in-place concrete work indicated in the Contract Documents or otherwise required for proper completion of the work.

1.02 RELATED SECTIONS

A. Section 013300 - Structural Submittals.

B. Section 014525 - Structural Testing/Inspection Agency Services.

C. Section 031000 - Concrete Formwork.

D. Section 032000 - Concrete Reinforcement.

1.03 REFERENCES

A. ACI 214 - Recommended Practice for Evaluation of Strength Test Results of Concrete.

B. ACI 301 - Specifications for Structural Concrete for Buildings.

C. ACI 302.1 - Guide for Concrete Floor and Slab Construction.

D. ACI 304 - Guide for Measuring, Mixing, Transporting and Placing Concrete.

E. ACI 305 - Hot Weather Concreting.

F. ACI 306 - Cold Weather Concreting.

G. ACI 308 - Standard Practice for Curing Concrete.

H. ACI 309 - Guide for Consolidation of Concrete.

I. ACI 318 - Building Code Requirements for Structural Concrete.

J. ASTM C31 - Standard Practice for Making and Curing Concrete Test Specimens in the Field.

K. ASTM C33 - Standard Specification for Concrete Aggregates.

L. ASTM C39 - Standard Test Method for Compressive Strength of Cylindrical Concrete Specimens.

M. ASTM C94 - Standard Specification for Ready-Mixed Concrete.

N. ASTM C138 - Standard Test Method for Unit Weight, Yield, and Air Content (Gravimetric) of Concrete.

O. ASTM C143 - Standard Test Method for Slump of Hydraulic Cement Concrete.

P. ASTM C150 - Standard Specification for Portland Cement.

Q. ASTM C172 - Standard Practice for Sampling Freshly Mixed Concrete.

R. ASTM C173 - Standard Test Method for Air Content of Freshly Mixed Concrete by the Volumetric Method.

S. ASTM C230 - Standard Specification for Flow Table or Use in Tests of Hydraulic Cement.

T. ASTM C260 - Standard Specification for Air-Entraining Admixtures for Concrete.

U. ASTM C494 - Standard Specification for Chemical Admixtures for Concrete.

V. ASTM C618 - Standard Specification for Fly Ash and Raw or Calcined Natural Pozzolan for Use as a Mineral Admixture in Portland Cement Concrete.

W. ASTM E1155 - Standard Test Method for Determining Floor Flatness and Levelness Using the F-Number System.

X. ASTM C1315 - Standard Specification for Liquid Membrane-Forming Compounds Having Special Properties for Curing and Sealing Concrete.

1.04 NOTICE

A. Notify Design Professional and Structural Testing/Inspection Agency not less than 48 hours prior to placing concrete.

1.05 QUALITY ASSURANCE

A. Structural Testing/Inspection Agency shall perform the following quality related items:

1. Examine concrete in truck to verify that concrete appears properly mixed.
2. Perform a slump test as deemed necessary for each concrete load. Record if water or admixtures are added to the concrete at the job site. Perform additional slump tests after job site adjustments.
3. Mold four specimens per set for compressive strength testing; one set for each 75 cubic yards of each mix design placed in any one day. For each set molded, record:

   a. Slump
   b. Air content
   c. Unit weight
   d. Temperature, ambient and concrete
   e. Location of placement
   f. Any pertinent information, such as addition of water, addition of admixtures, etc.

   Perform one 7-day and two 28-day compressive strength tests. (Use one as a spare to be broken as directed by the Design Professional if compressive strengths do not appear adequate.)

4. Report in writing, as directed by the Design Professional, on the same day that tests are performed. Reports of compressive strength tests shall contain the project identification name and number, date of concrete placement, name of concrete testing agency, concrete design compressive strength, location of concrete placement in structure, concrete mix proportions and materials, compressive breaking strength and type of break.

- The ready-mixed concrete plant shall be certified for conformance with the requirements of the National Ready Mix Concrete Association.
- The Structural Testing / Inspection Agency shall provide special inspections as required by Chapter 17 of the building code as required in Specification 01 4525.

1.06 CONCRETE MIX DESIGN

A. Establish concrete mix design proportions in accordance with ACI 318, Chapter 5.

B. Submit concrete mix designs. Include the following:

1. Type and quantities of materials.
2. Slump.
3. Air content.
4. Fresh unit weight.
5. Aggregates sieve analysis.
6. Design compressive strength.
7. Location of placement in structure.
8. Method of placement.
9. Method of curing.
10. Seven-day and 28-day compressive strengths.

C. Concrete supplier shall submit certifications that the materials used meet applicable ASTM Specifications. Mix designs not conforming to the above will be rejected.

1.07 SLUMP

A. Design concrete with a maximum slump of five inches.

B. If a slump greater than five inches is desired it shall be achieved with a high-range water reducer. Design the concrete mix with a high range water reducer slump of two and one-half inches plus or minus one and one-half inches. The maximum slump after high-range water reducers are added shall be eight inches.

1.08 FRESH UNIT WEIGHT

A. Normal weight concrete shall have a fresh unit weight of 140 to 152 pcf.

1.09 AIR CONTENT

A. No entrained air content is required in concrete placed in the foundation.

B. For normal weight concrete, entrained air content shall be four and one-half percent plus or minus one and one-half percent, unless specified otherwise.

1.10 WATER/CEMENT RATIO

A. Concrete elements shall have a maximum water cement ratio of 0.50, unless noted otherwise.

B. Air entrained concrete elements shall have a maximum water cement ratio of 0.45.

1.11 SUBMITTALS

A. Submit a concrete mix design as specified above for each type of concrete included in the work.

B. Submit a certification from each manufacturer or supplier stating that materials meet the requirements of the ASTM and ACI standards referenced.

C. Submit manufacturer's data including Product Data and installation instructions for the following items. Manufacturer's Data shall include the name of the manufacturer and date of the publication. All manufacturers' data shall be maintained at the project site by the contractor.

Admixtures
Curing materials
Joint sealing materials
Expansion joint filler
Patching compounds
Bonding agents

PART 2 PRODUCTS

2.01 MATERIALS

A. Materials designated by specific manufacturer's trade names are approved, subject to compliance with the quality and performance indicated by the manufacturer. Instructions and specifications published by the manufacturer of such materials are included in and are a part of these specifications. Upon request, provide certification from manufacturer or supplier that materials designated by reference to ASTM and ACI standards meet the requirements of these standards.

2.02 CONCRETE STRENGTH

A. Provide concrete strengths indicated on the Structural Drawings.

2.03 CEMENT

A. Portland cement shall conform to ASTM C150, Type I, unless noted otherwise. Use one brand only.

2.04 AGGREGATE

A. Fine aggregate shall conform to ASTM C33.

B. Coarse aggregate of gravel or crushed stone shall conform to ASTM C33, Class 3M. Size coarse aggregate in accordance with ACI 318.

2.05 WATER

A. Water shall be potable and free of deleterious substances in accordance with ACI 318.

2.06 AIR ENTRAINING AGENT

A. Air entraining agent shall conform to ASTM C260.

2.07 WATER REDUCER

A. Water reducing agent shall conform to ASTM C494.

2.08 HIGH-RANGE WATER REDUCER

A. High-range water reducers (superplasticizers) shall conform to ASTM C494.

2.09 CHLORIDE

A. Use no chlorides of any form in concrete.

2.10 CURING COMPOUND

A. An acrylic curing compound meeting the requirements of ASTM C1315 and all local, state and federal Volatile Organic Carbon regulations may be used at the Contractor's option.

2.11 FLY ASH

A. Fly ash shall be Class F fly ash with a loss on ignition of less than five percent or Class C fly ash with a loss on ignition of less than one percent in accordance with ASTM C618.

2.12 ACCELERATORS

A. Non-chloride accelerators shall conform to ASTM C494.

2.13 RETARDERS

A. Retarders shall conform to ASTM C494.

PART 3 EXECUTION

3.01 HIGH-RANGE WATER REDUCERS

A. High-range water reducers are to be added at dosage recommended by the manufacturer. The slump of the concrete shall be one to four inches at the time the high-range water reducers are added. Do not permit fresh concrete containing superplasticizers to come in contact with fresh concrete not containing superplasticizers.

3.02 ADDITION OF WATER AT JOB SITE

A. Provide batch tickets indicating the amount of mix water withheld at the batch plant for each load of concrete delivered. Water may be added to the batch only if neither the maximum permissible water/cement ratio nor the maximum slump is exceeded.

B. Water shall not be added to the batch after the required on-site testing has been performed.

3.03 PLACEMENT OF CONCRETE

A. Deposit concrete as near as practical to final position to prevent segregation of concrete.

B. Do no flowing of concrete with vibrators.

C. Place floors and slabs in accordance with ACI 302.

D. Do not use aluminum equipment in placing and finishing concrete.

E. Place thickened slabs for partitions integral with floor slabs.

F. Prepare place of deposit, mix, convey, place, and cure concrete in accordance with ACI 301, ACI 304, and ACI 318. Wet forms before placing concrete.

3.04 TIME LIMIT

A. Deposit concrete within one and one-half hours after batching.

3.05 VIBRATION

A. Consolidate concrete in accordance with ACI 301 and ACI 309.

3.06 CURING

A. Begin curing procedures immediately following the commencement of the finishing operation.

B. Cure concrete in accordance with ACI 308. Keep the concrete surface moist. If an acrylic curing compound is used, apply in accordance with manufacturer's recommendations to surfaces of concrete not protected for five days by formwork. Do not use curing compounds in areas to receive material that does not adhere to concrete cured with a curing compound unless the curing compound is water soluble.

3.07 ENVIRONMENTAL PROVISIONS

A. Perform cold weather concreting in accordance with ACI 306.

B. Perform hot weather concreting in accordance with ACI 305.

C. Protect concrete from drying and excessive temperature for the first seven days.

D. Protect fresh concrete from wind.

3.08 CONTRACTION JOINTS

A. Obtain Design Professional 's approval for location of contraction joints.

B. Do not place contraction joints in framed floors, composite slabs, or shear walls.

C. Place contraction joints in slabs-on-grade as indicated on the Drawings.

3.09 CUTTING CONCRETE

A. Obtain Design Professional's written approval prior to cutting concrete for installation of other work.

3.10 PATCHWORK AND REPAIRS

A. Notify Design Professional of any defective areas in concrete to be patched or repaired. Repair and patch defective areas with non-shrink grout. Cut out defective areas over two inches in diameter to solid concrete, but not less than a depth of one inch. Make edges of cuts perpendicular to the concrete surface.

3.11 CONCRETE FINISHES

A. Finish concrete in accordance with ACI 301.

END OF SECTION

wright gardner architect llc

154 Krog Street, #125
Atlanta, GA 30307
404-218-8460

SHEAR STRUCTURAL
931 MONROE DRIVE
SUITE A102-491
ATLANTA, GA 30308
(678) 964-8051
SHEARSTRUCTURAL.COM

ARCADE CITY PARK
PHASE 1 IMPROVEMENTS

ARCADE, GEORGIA

stamp:

revisions

No.	Description	Date

sheet title:

STRUCTURAL SPECIFICATIONS

project number: 17-053
drawing date: 02.06.2019
scale as noted

sheet number:

S0-04

☐ NOT ISSUED FOR CONSTRUCTION
■ ISSUED FOR CONSTRUCTION

SECTION 042200

STRUCTURAL CONCRETE MASONRY

PART 1 GENERAL

1.01 SECTION INCLUDES

A. Section includes structural concrete masonry shown on the Structural Drawings.

1.02 RELATED SECTIONS

A. Section 013330 - Structural Submittals.

B. Section 014525 - Structural Testing/Inspection Agency Services.

C. Section 032000 - Concrete Reinforcement.

D. Section 033000 - Cast-in-Place Concrete.

E. Section 042000 - Unit Masonry.

1.03 REFERENCES

A. ACI 530.1/ASCE 6/TMS 602 - Specifications for Masonry Structures.

B. ASTM A82 - Standard Specification for Steel Wire, Plain, for Concrete Reinforcement

C. ASTM A153 - Standard Specification for Zinc Coating (Hot-Dip) on Iron and Steel Hardware.

D. ASTM A496 - Standard Specification for Steel Wire, Deformed, for Concrete Reinforcement.

E. ASTM C90 - Standard Specification for Load-Bearing Concrete Units.

F. ASTM C109 - Standard Test Method for Compressive Strength of Hydraulic Cement Mortars (Using 2-in. or 50-mm Cube Specimens).

G. ASTM C140 - Standard Methods of Sampling and Testing Concrete Masonry Units.

H. ASTM C144 - Standard Specification for Aggregate for Masonry Mortar.

I. ASTM C270 - Standard Specification for Mortar for Unit Masonry.

J. ASTM C404 - Standard Specification for Aggregates for Masonry Grout.

K. ASTM C476 - Standard Specification for Grout for Masonry.

L. ASTM C1019 - Standard Method of Sampling and Testing Grout.

M. ASTM D2000 - Standard Classification System for Rubber Products in Automotive Applications.

N. ASTM E447 - Standard Test Methods for Compressive Strength of Masonry Prisms.

1.04 SUBMITTALS

A. Submit coarse grout mix design.

B. Upon request, submit material certificates signed by the material supplier that the masonry units, mortar, reinforcement, and joint material complies with specification requirements.

C. Submit shop drawings for masonry reinforcement in accordance with Section 032000.

D. Submit procedures for construction of masonry walls to be filled with coarse grout. Procedures should include high lift or low lift grouting as applicable to project.

1.05 QUALITY ASSURANCE

A. Structural Testing/Inspection Agency shall perform the following quality related items:

1. Verify reinforcing steel for quantity, size, and location.
2. Verify placement of coarse grout as indicated in high or low lift procedure.
3. Verify compressive strength of concrete masonry units, mortar, coarse grout, or masonry prisms for each 5,000 sq. ft. of surface area as follows:
   a. Three (3) concrete masonry units shall be tested in accordance with ASTM C140.
   b. Six (6) mortar cube specimens shall be tested, three (3) at 7-days and three (3) at 28-days, in accordance with ASTM C109.
   c. Four (4) coarse grout specimens shall be tested, two (2) at 7-days and two (2) at 28-days, in accordance with ASTM C1019.
   d. In lieu of individual tests of masonry units, mortar, and grout, if directed by the Design Professional, perform one (1) prism test (which consists of three prisms) in accordance with ASTM E447.

B. The Structural Testing / Inspection Agency shall provide special inspections as required by Chapter 17 of the building code as required by Specification 01 4525.

1.06 HANDLING OF MATERIALS

A. Package, handle, and store materials to protect from elements and prevent contamination.

PART 2 PRODUCTS

2.01 CONCRETE MASONRY

A. Concrete masonry shall have the minimum compressive strength (f'm) specified on the Drawings.

2.02 CONCRETE MASONRY UNITS

A. Concrete masonry units shall conform to ASTM C90, Type II (moisture controlled).

B. Provide normal weight concrete masonry units.

C. Concrete masonry units shall have, as a minimum, the net area compressive strength listed in Table 1.6.2.2 of ACI 530.1/ASCE 6/TMS 602 required for the specified f'm.

D. Provide standard units with face dimensions of 16" long x 8" high nominal, unless indicated otherwise.

E. Provide special shapes where indicated on the Drawings.

2.03 MORTAR

A. Mortar shall be Type M or Type S in accordance with ASTM C270. Refer to Drawings for locations.

B. Do not use admixtures that contain chlorides.

2.04 COARSE GROUT

A. Coarse grout shall conform to ASTM C476.

B. Coarse grout shall have the minimum compressive strength specified on the Drawings.

C. Mix grout to a consistency which has a slump between 8 and 10 inches.

D. Do not use admixtures that contain chlorides.

2.05 WATER

A. Provide clean potable water free of deleterious substances.

2.06 REINFORCEMENT

A. Horizontal and vertical reinforcing bars shall comply with Section 03200.

2.07 HORIZONTAL JOINT REINFORCEMENT

A. Horizontal joint reinforcement shall be manufactured with longitudinal parallel, deformed side wires in accordance with ASTM A496 and of the size specified on the Drawings. Cross wires shall be No. 9 gage, plain, in accordance with ASTM A82.

B. Provide as a minimum, one side wire for each face shell of hollow masonry units. Provide additional side wires or eye sections for adjustable wall ties as specified for multiwythe wall construction.

C. Provide truss type joint reinforcement, except ladder type reinforcement shall be used for walls with vertical reinforcement.

D. Horizontal joint reinforcement shall be hot-dipped galvanized in accordance with ASTM A153, Class B-2.

E. Provide prefabricated corner and tee shape corner accessories.

2.08 CONTRACTION JOINT MATERIAL

A. Contraction joint material shall comply with ASTM D2000, M2AA-805 with rubber shear keys with a minimum durometer hardness of 80.

PART 3 EXECUTION

3.01 MIXING

A. Except as otherwise approved for small batches, mix in mechanically operated batch mixers of drum type in which water can be accurately and uniformly controlled. Allow five minutes maximum mixing time, two minutes for dry mixing and three minutes for continued mixing after water has been added. Do not permit volume of batch to exceed manufacturer's rated capacity of mixer drum. Empty drum completely before placing next batch. Keep mixers and wheelbarrows clean. Do not deposit mortar upon or permit contact with ground.

B. Do not use anti-freeze compounds.

3.02 CONSTRUCTION

A. Use dry masonry units. No frozen or wet units shall be used.

B. Discard cracked, chipped, and spalled masonry units.

C. Deliver mortar to mason's board at point of use within 45 minutes after mixing. Do no retempering. Use no admixtures. Use pre-hydrated mortar for tuck points. Prepare pointing mortar with as dry consistency as will produce mortar sufficiently plastic to be worked into joints.

D. During erection cover top of wall with strong waterproof membrane at end of each day when shutdown. Cover partially completed walls when work is not in progress. Extend and secure cover a minimum of 24 in. down both sides. Do not apply uniform floor or roof loading for at least 12 hours after building masonry columns or walls. Do not apply concentrated loads for at least 3 days after building masonry columns or walls.

E. Provide temporary bracing during erection as required to stabilize erected masonry.

F. Except where otherwise indicated, lay block in running bond.

3.03 PLACING AND BONDING

A. Lay masonry in full beds of mortar on mating surfaces, and properly jointed with other work. Buttering corners of joints, deep or excess furrowing of mortar joints is not permitted.

B. Fully bond external corners of concrete block. Where interior block partitions intersect other block walls or partitions, provide control joints with mortar raked back 1/4 inch.

C. Isolate masonry partitions from vertical structural framing members with control joints, with mortar racked back 1/4 inch.

D. Where non-bearing masonry partitions extend to underside of floor, roof deck or structural system, stop masonry short 3/8 to 1/2 inch to allow for live load deflection. Fill gap with soft joint filler.

E. Where masonry chase walls are constructed, one wall can be stopped above ceiling to provide access space.

3.04 CONTRACTION JOINTS

A. Install contraction joints at locations indicated on the Drawings in all masonry walls. Do not run masonry reinforcement through contraction joints.

3.05 TOLERANCES

A. Variation from Unit to Adjacent Unit: 1/32 inch maximum.

B. Variation from Plan of Wall: Maximum 1/4 inch in 10 feet, and 1/2 inch in 20 feet or more.

C. Variation from Plumb: +/- 1/4 inch in 10 feet, +/- 3/8 inch in 20 feet; +/- 1/2 inch maximum.

D. Variation in Level Coursing: +/- 1/4 inch in 10 feet; +/- 1/2 inch maximum.

E. Variation in Joint Thickness: +/- 1/8 inch Maximum.

3.06 CLEANING AND POINTING

A. Clean space as it is completed, but in every case, clean at least once each week. All debris shall be removed to appropriate container and hauled off the site as required to avoid over filling.

B. Dry brush masonry surfaces before mortar has set hard to remove mortar crumbs and accumulation.

C. Clean masonry with commercial brick cleaner approved by brick manufacturer. Protect other work from cleaning materials.

D. Cut out defective mortar and repoint.

3.07 HORIZONTAL JOINT REINFORCEMENT

A. Place horizontal joint reinforcement in the horizontal mortar beds at spacings as noted in the Drawings, except as specified herein.

B. For masonry below grade, space horizontal joint reinforcing at 8 inches vertically.

C. Above lintels and below sills at openings, place a continuous run of horizontal joint reinforcement in the first two bed joints, 8 inches apart. Extend joint reinforcement two feet beyond opening.

D. Joint reinforcement shall be continuous, except it shall not pass through vertical masonry contraction joints. Lap joint reinforcement a minimum of 6 inches.

3.08 ENVIRONMENTAL PROVISIONS

A. Cold weather masonry construction shall comply with the International Masonry All-Weather Councils' "Recommended Practices and Guide Specifications for Cold Weather Masonry Construction, Section 04200."

END OF SECTION

SECTION 312301

EXCAVATING, BACKFILLING, AND COMPACTING FOR STRUCTURES

PART 1 GENERAL

1.01 SECTION INCLUDES

A. Section includes the excavation, backfilling and compacting required for the structures shown in the Contract Drawings.

1.02 RELATED SECTIONS

A. Section 013330 - Structural Submittals.

B. Section 014525 - Structural Testing/Inspection Agency Services.

1.03 REFERENCES

A. ASTM D422 - Standard Test Method for Particle-Size Analysis of Soils.

B. ASTM D698 - Test Method for Laboratory Compaction Characteristics of Soil Using Standard Effort (12,400 ft-lbf/ft^3).

C. ASTM D1556 - Standard Test Method for Density and Unit Weight of Soil in Place by the Sand-Cone Method.

D. ASTM D3017 - Standard Test Method for Water Content of Soil and Rock in Place by Nuclear Methods (Shallow Depth).

E. ASTM D4318 - Standard Test Method for Liquid Limit, Plastic Limit, and Plasticity Index of Soils.

1.04 DEFINITIONS

A. Granular subbase: Granular fill directly beneath slabs-on-grade.

B. Backfill: Fill immediately behind foundation elements or retaining walls.

C. Structural fill: Fill under the structure other than the granular subbase.

1.05 SUBMITTALS

A. Upon request, submit soil test reports performed by the Structural Testing/Inspection Agency.

1.06 QUALITY ASSURANCE

A. Structural Testing/Inspection Agency shall perform the following quality related items:

1. Verify structural fill complies with specifications.
2. Determine particle size, liquid limit, plastic limit, plasticity index and maximum density of each type of soil.
3. Observe proofrolling.
4. Perform a sufficient number of field density tests to verify compaction of structural fill. As a minimum, perform one test per lift for every 2500 square feet of fill placed.
5. Verify foundation bearing capacity.
6. Verify quantities of material removed and quantities of material placed where Unit Prices are involved.

1.07 SURVEY

A. Prior to construction, have structure location staked and certified by a licensed surveyor. If discrepancies between actual lines and elevations exist, notify Design Professional before proceeding with layout of structure.

1.08 SUBSURFACE CONDITIONS

A. Copies of a subsurface investigation of the site will be made available upon request. The data is not intended as a representation or warranty of the continuity of such conditions. Owner will not be responsible for interpretation or conclusions drawn therefrom by the Contractor. The data is made available for the convenience of the Contractor and is not guaranteed to represent all conditions that may be encountered.

B. Contractor may examine the site and make his own subsurface explorations at no additional cost to the Owner. Notify Owner prior to making any subsurface explorations.

1.09 EXISTING UTILITIES

A. Locate existing underground utilities by careful hand excavation. If utilities are to remain in place, provide protection from damage during construction operations.

B. Cooperate with Owner and utility companies in keeping respective services and facilities in operation. Do not interrupt existing utility service facilities occupied and used by Owner or others, unless written permission is given by the Design Professional and then only after temporary utility services have been provided.

C. Should uncharted or incorrectly charted piping or other utilities be encountered during excavation, consult the Design Professional immediately for directions.

D. Repair damaged utilities to satisfaction of utility owner.

1.10 NOTICE

A. Notify the Design Professional 48 hours prior to the beginning of any excavation work.

PART 2 PRODUCTS

2.01 GRANULAR SUBBASE

A. Granular subbase shall be sound and free-draining, such as sand, gravel or crushed stone with less than 10% passing the 200 sieve. Maximum diameter shall be 1-1/2 inches.

2.02 BACKFILL

A. Backfill shall meet the requirements of the granular subbase.

2.03 STRUCTURAL FILL

A. Structural fill shall be engineer-approved low plasticity soil.

B. Structural fill shall be free of organics, debris and deleterious materials.

PART 3 EXECUTION

3.01 STRIPPING

A. Strip vegetation, topsoil, roots, and other unsuitable material to a depth determined by the Structural Testing/Inspection Agency but not less than one foot, nor less than 10 feet outside the perimeter of the structure.

B. Stockpile sufficient amounts of topsoil as required to cover areas to be landscaped with a minimum of six inches of material.

3.02 EXCAVATION

A. Excavation shall be considered unclassified.

B. Perform excavation to the depths and limits on the Drawings and as specified herein.

C. Do not excavate to full depth when there is probability of frost forming or ground freezing in excavation before concrete is placed.

D. Ground water may be encountered during the foundation excavation. Provide a system for controlling the ground water to a level at least three feet below the lowest point of the excavation.

E. Keep excavations dry by sloping ground away from holes and trenches.

3.03 PROOFROLLING

A. After stripping or excavation and before any fill placement, fill areas shall be proofrolled with a minimum of two coverages of a loaded dump truck or scraper in each of two perpendicular directions.

B. Areas found to be soft or pumping shall have the soft soil removed and replaced with structural fill and compacted as outlined herein.

3.04 PLACEMENT OF STRUCTURAL FILL

A. Do not place structural fill on subgrade that contains frost, mud or is frozen.

B. Structural fill shall be placed and compacted in 9 -inch thick loose layers.

C. Compact structural fill to 95 percent of the maximum dry density as measured by Standard Proctor, ASTM D698, with water content within +/-3 percent of the optimum moisture content.

3.05 PLACEMENT OF GRANULAR SUBBASE

A. Do not place granular subbase on subgrade that contains frost, mud or is frozen.

B. Compact granular subbase to 95 percent of the maximum dry density as measured by Standard Proctor, ASTM D698, with the water content within +/-3 percent of the optimum moisture content.

3.06 CLEAN UP

A. Remove excess excavated materials from job site and upon completion leave site in clean condition.

END OF SECTION

wright gardner architect llc

154 Krog Street, #125
Atlanta, GA 30307
404-218-8460

SHEAR STRUCTURAL
931 MONROE DRIVE
SUITE A102-491
ATLANTA, GA 30308
(678) 964-8051
SHEARSTRUCTURAL.COM

ARCADE CITY PARK
PHASE 1 IMPROVEMENTS

ARCADE, GEORGIA

stamp:

revisions

No.	Description	Date

sheet title:

STRUCTURAL SPECIFICATIONS

project number: 17-053
drawing date: 02.06.2019
scale as noted

sheet number:

S0-05

☐ NOT ISSUED FOR CONSTRUCTION
■ ISSUED FOR CONSTRUCTION

SCHEDULE OF SPECIAL INSPECTION SERVICES

PROJECT: Arcade City Park - Phase I Improvements

APPLICABLE TO THIS PROJECT

MATERIAL / ACTIVITY	SERVICE	Y/N	EXTENT	AGENT*	DATE COMPLETED
1704.2.5 Inspection of Fabricators					
Verify fabrication/quality control procedures	In-plant review (3)	N	Periodic		
1705.1.1 Special Cases (work unusual in nature, including but not limited to alternative materials and systems, unusual design applications, materials and systems with special manufacturer's requirements)	Submittal review, shop (3) and/or field inspection	N			
1705.2 Steel Construction					
1. Fabricator and erector documents (Verify reports and certificates as listed in AISC 360, chapter N, paragraph 3.2 for compliance with construction documents)	Submittal Review	N	Each submittal		
2. Material verification of structural steel	Shop (3) and field inspection	Y	Periodic		
3. Embedments (Verify diameter, grade, type, length, embedment. See 1705.3 for anchors)	Field inspection	Y	Periodic		
4. Verify member locations, braces, stiffeners, and application of joint details at each connection comply with construction documents	Field inspection	N	Periodic		
5. Structural steel welding:					
a. Inspection tasks Prior to Welding (Observe, or perform for each welded joint or member, the QA tasks listed in AISC 360, Table N5.4-1)	Shop (3) and field inspection	Y	Observe or Perform as noted (4)		
b. Inspection tasks During Welding (Observe, or perform for each welded joint or member, the QA tasks listed in AISC 360, Table N5.4-2)	Shop (3) and field inspection	Y	Observe (4)		
c. Inspection tasks After Welding (Observe, or perform for each welded joint or member, the QA tasks listed in AISC 360, Table N5.4-3)	Shop (3) and field inspection	Y	Observe or Perform as noted (4)		
d. Nondestructive testing (NDT) of welded joints: see Commentary		N			
1) Complete penetration groove welds 5/16" or greater in risk category III or IV	Shop (3) or field ultrasonic testing - 100%		Periodic		
2) Complete penetration groove welds 5/16" or greater in risk category II	Shop (3) or field ultrasonic testing - 10% of welds minimum		Periodic		
3) Thermally cut surfaces of access holes when material t > 2"	Shop (3) or field magnetic Partical or Penetrant testing		Periodic		
4) Welded joints subject to fatigue when required by AISC 360, Appendix 3, Table A-3.1	Shop (3) or field radiographic or Ultrasonic testing		Periodic		
5) Fabricator's NDT reports when fabricator performs NDT	Verify reports		Each submittal (5)		
6. Structural steel bolting:	Shop (3) and field inspection	N			
a. Inspection tasks Prior to Bolting (Observe, or perform tasks for each bolted connection, in accordance with QA tasks listed in AISC 360, Table N5.6-1)			Observe or Perform as noted (4)		
b.Inspection tasks During Bolting (Observe the QA tasks listed in AISC 360, Table N5.6-2)			Observe (4)		
1) Pre-tensioned and slip-critical joints					
a) Turn-of-nut with matching markings			Periodic		
b) Direct tension indicator			Periodic		
c) Twist-off type tension control bolt			Periodic		
d) Turn-of-nut without matching markings			Continuous		
e) Calibrated wrench			Continuous		
2) Snug-tight joints			Periodic		
c. Inspection tasks After Bolting (Perform tasks for each bolted connection in accordance with QA tasks listed in AISC 360, Table N5.6-3)			Perform (4)		
7. Inspection of steel elements of composite construction prior to concrete placement in accordance with QA tasks listed in AISC 360, Table N6.1	Shop (3) and field inspection and testing		Observe or Perform as noted (4)		
1705.2.2 Steel Construction Other Than Structural Steel		N			
1. Material verification of cold-formed steel deck:					
a. Identification markings	Field inspection		Periodic		
b. Manufacturer's certified test reports	Submittal Review		Each submittal		
2. Connection of cold-formed steel deck to supporting structure:	Shop (3) and field inspection				
a. Welding			Periodic		
b. Other fasteners (in accordance with AISC 360,Section N6)					
1) Verify fasteners are in conformance with approved submittal			Periodic		
2) Verify fastener installation is in conformance with approved submittal and manufacturer's recommendations			Periodic		
3. Reinforcing steel	Shop (3) and field inspection				
a. Verification of weldability of steel other than ASTM A706			Periodic		
b. Reinforcing steel resisting flexural and axial forces in intermediate and special moment frames, boundary elements of special concrete structural walls and shear reinforcement			Continuous		
c. Shear reinforcement			Continuous		
d. Other reinforcing steel			Periodic		
4. Cold-formed steel trusses spanning 60 feet or greater					
a. Verify temporary and permanent restraint/bracing are installed in accordance with the approved truss submittal package	Field inspection		Periodic		
1705.3 Concrete Construction					
1. Inspection of reinforcing steel installation (see 1705.2.2 for welding)	Shop (3) and field inspection	Y	Periodic		
2. Inspection of prestressing steel installation	Shop (3) and field inspection	N	Periodic		

SCHEDULE OF SPECIAL INSPECTION SERVICES

PROJECT: Arcade City Park - Phase I Improvements

APPLICABLE TO THIS PROJECT

MATERIAL / ACTIVITY	SERVICE	Y/N	EXTENT	AGENT*	DATE COMPLETED
3. Inspection of anchors cast in concrete where allowable loads have been increased per section 1908.5 or where strength design is used	Shop (3) and field inspection	N	Periodic		
4. Inspection of anchors and reinforcing steel post-installed in hardened concrete: Per research reports including verification of anchor type, anchor dimensions, hole dimensions, hole cleaning procedures, anchor spacing, edge distances, concrete minimum thickness, anchor embedment and tightening torque	Field inspection	N	Periodic or as required by the research report issued by an approved source		
5. Verify use of approved design mix	Shop (3) and field inspection	Y	Periodic		
6. Fresh concrete sampling, perform slump and air content tests and determine temperature of concrete	Shop (3) and field inspection	Y	Continuous		
7. Inspection of concrete and shotcrete placement for proper application techniques	Shop (3) and field inspection	Y	Continuous		
8. Inspection for maintenance of specified curing temperature and techniques	Shop (3) and field inspection	Y	Periodic		
9. Inspection of prestressed concrete:	Shop (3) and field inspection	N			
a. Application of prestressing force			Continuous		
b. Grouting of bonded prestressing tendons in the seismic-force-resisting system			Continuous		
10. Erection of precast concrete members		N			
a. Inspect in accordance with construction documents	Field inspection		In accordance with construction documents		
b. Perform inspections of welding and bolting in accordance with Section 1705.2	Field inspection		In accordance with Section 1705.2		
11. Verification of in-situ concrete strength, prior to stressing of tendons in post tensioned concrete and prior to removal of shores and forms from beams and structural slabs	Review field testing and laboratory reports	N	Periodic		
12. Inspection of formwork for shape, lines, location and dimensions	Field inspection	Y	Periodic		
13. Concrete strength testing and verification of compliance with construction documents	Field testing and review of laboratory reports	Y	Periodic		
1705.4 Masonry Construction					
(A) Level A, B and C Quality Assurance:					
1. Verify compliance with approved submittals	Field Inspection	Y	Periodic		
(B) Level B Quality Assurance:					
1. Verification of f'm and f'AAC prior to construction	Testing by unit strength method or prism test method	Y	Periodic		
(C) Level C Quality Assurance:		N			
1. Verification of f'm and f'AAC prior to construction and for every 5,000 SF during construction	Testing by unit strength method or prism test method		Periodic		
2. Verification of proportions of materials in premixed or preblended mortar, prestressing grout, and grout other than self-consolidating grout, as delivered to the project site	Field inspection		Continuous		
3. Verify placement of masonry units	Field Inspection		Periodic		
(D) Levels B and C Quality Assurance:					
1. Verification of Slump Flow and Visual Stability Index (VSI) of self-consolidating grout as delivered to the project	Field testing	Y	Continuous		
2. Verify compliance with approved submittals	Field inspection	Y	Periodic		
3. Verify proportions of site-mixed mortar, grout and prestressing grout for bonded tendons	Field Inspection	Y	Periodic		
4. Verify grade, type, and size of of reinforcement and anchor bolts, and prestressing tendons and anchorages	Field Inspection	Y	Periodic		
5. Verify construction of mortar joints	Field Inspection	Y	Periodic		
6. Verify placement of reinforcement, connectors, and prestressing tendons and anchorages	Field Inspection	Y	Level B - Periodic		
			Level C - Continuous		
7. Verify grout space prior to grouting	Field Inspection	Y	Level B - Periodic		
			Level C - Continuous		
8. Verify placement of grout and prestressing grout for bonded tendons	Field Inspection	Y	Continuous		
9. Verify size and location of structural masonry elements	Field Inspection	Y	Periodic		
10. Verify type, size, and location of anchors, including details of anchorage of masonry to structural members, frames, or other construction.	Field inspection	Y	Level B - Periodic		
			Level C - Continuous		
11. Verify welding of reinforcement (see 1705.2.2)	Field inspection	N	Continuous		
12. Verify preparation, construction, and protestion of masonry during cold weather (temperature below 40oF) or hot weather (temperature above 90oF)	Field inspection	Y	Periodic		
13. Verify application and measurement of prestressing force	Field Inspection	N	Continuous		

SCHEDULE OF SPECIAL INSPECTION SERVICES

PROJECT: Arcade City Park - Phase I Improvements

APPLICABLE TO THIS PROJECT

MATERIAL / ACTIVITY	SERVICE	Y/N	EXTENT	AGENT*	DATE COMPLETED
14. Verify placement of AAC masonry units and construction of thin-bed mortar joints (first 5000 SF of AAC masonry)	Field inspection	N	Continuous		
15. Verify placement of AAC masonry units and construction of thin-bed mortar joints (after the first 5000 SF of AAC masonry)	Field inspection	N	Level B - Periodic		
		N	Level C - Continuous		
16. Verify properties of thin-bed mortar for AAC masonry (first 5000 SF of AAC masonry)	Field inspection	N	Continuous		
17. Verify properties of thin-bed mortar forAAC masonry (after the first 5000 SF of AAC masonry)	Field inspection	N	Level B - Periodic		
		N	Level C - Continuous		
18. Prepare grout and mortar specimens	Field testing	Y	Level B - Periodic		
			Level C - Continuous		
19. Observe preparation of prisms	Field inspection	Y	Level B - Periodic		
			Level C - Continuous		
1705.5 Wood Construction		N			
1. Inspection of the fabrication process of wood structural elements and assemblies in accordance with Section 1704.2.5	In-plant review (3)		Periodic		
2. For high-load diaphragms, verify grade and thickness of structural panel sheathing agree with approved building plans	Field inspection		Periodic		
3. For high-load diaphragms, verify nominal size of framing members at adjoining panel edges, nail or staple diameter and length, number of fastener lines, and that spacing between fasteners in each line and at edge margins agree with approved building plans	Field inspection		Periodic		
4. Metal-plate-connected wood trusses spanning 60 feet or greater: verify temporary and permanent restraint/bracing are installed in accordance with the approved truss submittal package	Field inspection		Periodic		
1705.6 Soils					
1. Verify materials below shallow foundations are adequate to achieve the design bearing capacity.	Field inspection	Y	Periodic		
2. Verify excavations are extended to proper depth and have reached proper material.	Field inspection	Y	Periodic		
3. Perform classification and testing of controlled fill materials.	Field inspection	Y	Periodic		
4. Verify use of proper materials, densities, and lift thicknesses during placement and compaction of controlled fill	Field inspection	Y	Continuous		
5. Prior to placement of controlled fill, observe subgrade and verify that site has been prepared properly	Field inspection	Y	Periodic		
1705.7 Driven Deep Foundations		N			
1. Verify element materials, sizes and lengths comply with requirements	Field inspection		Continuous		
2. Determine capacities of test elements and conduct additional load tests, as required	Field inspection		Continuous		
3. Observe driving operations and maintain complete and accurate records for each element	Field inspection		Continuous		
4. Verify placement locations and plumbness, confirm type and size of hammer, record number of blows per foot of penetration, determine required penetrations to achieve design capacity, record tip and butt elevations and document any damage to foundation element	Field inspection		Continuous		
5. For steel elements, perform additional inspections per Section 1705.2	See Section 1705.2		See Section 1705.2		
6. For concrete elements and concrete-filled elements, perform additional inspections per Section 1705.3	See Section 1705.3		See Section 1705.3		
7. For specialty elements, perform additional inspections as determined by the registered design professional in responsible charge	Field inspection		In accordance with construction documents		
8. Perform additional inspections and tests in accordance with the construction documents	Field Inspection and testing		In accordance with construction documents		
1705.8 Cast-in-Place Deep Foundations		N			
1.Observe drilling operations and maintain complete and accurate records for each element	Field inspection		Continuous		
2. Verify placement locations and plumbness, confirm element diameters, bell diameters (if applicable), lengths, embedment into bedrock (if applicable) and adequate end-bearing strata capacity. Record concrete or grout volumes	Field inspection		Continuous		
3. For concrete elements, perform additional inspections in accordance with Section 1705.3	See Section 1705.3		See Section 1705.3		
4. Perform additional inspections and tests in accordance with the construction documents	Field Inspection and testing		In accordance with construction documents		
1705.9 Helical Pile Foundations		N			
1. Verify installation equipment, pile dimensions, tip elevations, final depth, final installation torque and other data as required.	Field inspection		Continuous		
2. Perform additional inspections and tests in accordance with the construction documents	Field Inspection and testing		In accordance with construction documents		

SCHEDULE OF SPECIAL INSPECTION SERVICES

PROJECT: Arcade City Park - Phase I Improvements

APPLICABLE TO THIS PROJECT

MATERIAL / ACTIVITY	SERVICE	Y/N	EXTENT	AGENT*	DATE COMPLETED
1705.10.1 Structural Wood Special Inspections For Wind Resistance		N			
1. Inspection of field gluing operations of elements of the main windforce-resisting system	Field inspection		Continuous		
2. Inspection of nailing, bolting, anchoring and other fastening of components within the main windforce-resisting system	Shop (3) and field inspection		Periodic		
1705.10.2 Cold-formed Steel Special Inspections For Wind Resistance		N			
1.Inspection during welding operations of elements of the main windforce-resisting system	Shop (3) and field inspection		Periodic		
2.Inspections for screw attachment, bolting, anchoring and other fastening of components within the main windforce-resisting system	Shop (3) and field inspection		Periodic		
1705.10.3 Wind-resisting Components		N			
1. Roof cladding	Shop (3) and field inspection		Periodic		
2. Wall cladding	Shop (3) and field inspection		Periodic		
1705.11.1 Structural Steel Special Inspections for Seismic Resistance		N			
inspection of structural steel in accordance with AISC 341	Shop (3) and field inspection		In accordance with AISC 341		
1705.11.2 Structural Wood Special Inspections for Seismic Resistance		N			
1. Inspection of field gluing operations of elements of the seismic-force resisting system	Field inspection		Continuous		
2. Inspection of nailing, bolting, anchoring and other fastening of components within the seismic-force-resisting system	Shop (3) and field inspection		Periodic		
1705.11.3 Cold-formed Steel Light-Frame Construction Special Inspections for Seismic Resistance		N			
1. Inspection during welding operations of elements of the seismic-force-resisting system	Shop (3) and field inspection		Periodic		
2. Inspections for screw attachment, bolting, anchoring and other fastening of components within the seismic-force-resisting system	Shop (3) and field inspection		Periodic		
1705.11.4 Designated Seismic Systems Verification		N			
Inspect and verify that that the component label, anchorage or mounting conforms to the certificate of compliance in accordance with Section 1705.12.3	Field inspection		Periodic		
1705.11.5 Architectural Components Special Inspections for Seismic Resistance		N			
1. Inspection during the erection and fastening of exterior cladding and exterior and exterior veneer	Field inspection		Periodic		
2. Inspection during the erection and fastening of interior and exterior nonbearing walls	Field inspection		Periodic		
3. Inspection during anchorage of access floors	Field inspection		Periodic		
1705.11.6 Mechanical and Electrical Components Special Inspections for Seismic Resistance		N			
1. Inspection during the anchorage of electrical equipment for emergency or standby power systems	Field inspection		Periodic		
2. Inspection during the anchorage of other electrical equipment	Field inspection		Periodic		
3. Inspection during installation and anchorage of piping systems designed to carry hazardous materials, and their associated mechanical units	Field inspection		Periodic		
4. Inspection during the installation and anchorage of HVAC ductwork that will contain hazardous materials	Field inspection		Periodic		
5. Inspection during the installation and anchorage of vibration isolation systems	Field inspection		Periodic		
1705.11.7 Storage Racks Special Inspections for Seismic Resistance		N			
Inspection during the anchorage of storage racks 8 feet or greater in height	Field inspection		Periodic		
1705.11.8 Seismic Isolation Systems		N			
Inspection during the fabrication and installation of isolator units and energy dissipation devices used as part of the seismic isolation system	Shop and field inspection		Periodic		
1705.12.1 Concrete Reinforcement Testing and Qualification for Seismic Resistance		N			
1. Review certified mill test reports for each shipment of reinforcement used to resist earthquake-induced flexural and axial forces in reinforced concrete special moment frames, special structural walls, and coupling beams connecting special structural walls	Review certified mill test reports		Each shipment		

wright gardner architect llc

154 Krog Street, #125
Atlanta, GA 30307
404-218-8460

SHEAR STRUCTURAL
931 MONROE DRIVE
SUITE A102-491
ATLANTA, GA 30308
(678) 664-8051
SHEARSTRUCTURAL.COM

ARCADE CITY PARK
PHASE 1 IMPROVEMENTS

ARCADE, GEORGIA

stamp:

revisions

No.	Description	Date

sheet title:

SCHEDULE OF SPECIAL INSPECTIONS

project number: 17-053
drawing date: 02.06.2019
scale as noted

sheet number:

S0-06

☐ NOT ISSUED FOR CONSTRUCTION
■ ISSUED FOR CONSTRUCTION

SCHEDULE OF SPECIAL INSPECTION SERVICES

PROJECT	Arcade City Park - Phase I Improvements				
		APPLICABLE TO THIS PROJECT			
MATERIAL / ACTIVITY	SERVICE	Y/N	EXTENT	AGENT*	DATE COMPLETED
2. Verify reinforcement weldability of ASTM A615 reinforcement used to resist earthquake-induced flexural and axial forces in reinforced concrete special moment frames, special structural walls, and coupling beams connecting special structural walls	Review test reports		Each shipment		
1705.12.2 Structural Steel Testing and Qualification for Seismic Resistance		N			
Test in accordance with the quality assurance requirements of AISC 341	Shop (3) and field testing		Per AISC 341		
1705.12.3 Seismic Certification of Nonstructural Components		N			
Review certificate of compliance for designated seismic system components.	Certificate of compliance review		Each submittal		
1705.12.4 Seismic Isolation Systems		N			
Test seismic isolation system in accordance with ASCE 7 Section 17.8.	Prototype testing		Per ASCE 7		
1705.13 Sprayed Fire-resistant Materials		N			
1. Verify surface condition preparation of structural members	Field inspection		Periodic		
2. Verify application of sprayed fire-resistant materials	Field inspection		Periodic		
3. Verify average thickness of sprayed fire-resistant materials applied to structural members	Field inspection		Periodic		
4. Verify density of the sprayed fire-resistant material complies with approved fire-resistant design	Field inspection and testing		Per IBC Section 1705.13.5		
5. Verify the cohesive/adhesive bond strength of the cured sprayed fire-resistant material	Field inspection and testing		Per IBC Section 1705.13.6		
1705.14 Mastic and Intumescent Fire-Resistant Coatings		N			
Inspect mastic and intumescent fire-resistant coatings applied to structural elements and decks	Field inspection		Periodic		
1705.15 Exterior Insulation and Finish Systems (EIFS)		N			
1. Verify materials, details and installations are per the approved construction documents	Field inspection		Periodic		
2. Inspection of water-resistive barrier over sheathing substrate	Field inspection		Periodic		
1705.16 Fire-Resistant Penetrations and Joints		N			
1. Inspect penetration firestop	Field testing		Per ASTM E2174		
2. Inspect fire-resistant joint systems	Field testing		Per ASTM E2393		
1705.17 Smoke Control Systems		N			
1. Leakage testing and recording of device locations prior to concealment	Field testing		Periodic		
2. Prior to occupancy and after sufficient completion, pressure difference testing, flow measurements, and detection and control verification	Field testing		Periodic		

* INSPECTION AGENTS FIRM	ADDRESS	TELEPHONE NO.
1.		
2.		
3.		
4.		

Notes: 1. The inspection and testing agent(s) shall be engaged by the Owner or the Owner's Agent, and not by the Contractor or Subcontractor whose work is to be inspected or tested. Any conflict of interest must be disclosed to the Building Official prior to commencing work. The qualifications of the Special Inspector(s) and/or testing agencies may be subject to the approval of the Building Official and/or the Design Professional.

2. The list of Special Inspectors may be submitted as a separate document, if noted so above.

3. Special Inspections as required by Section 1704.2.5 are not required where the fabricator is approved in accordance with IBC Section 1704.2.5.2

4. Observe on a random basis, operations need not be delayed pending these inspections. Perform these tasks for each welded joint, bolted connection, or steel element.

5. NDT of welds completed in an approved fabricator's shop may be performed by that fabricator when approved by the AHJ. Refer to AISC 360, N7.

Are Requirements for Seismic Resistance included in the Statement of Special Inspections ? YES

Are Requirements for Wind Resistance included in the Statement of Special Inspections ? NO

DATE: 10/05/2018

wright gardner architect llc

154 Krog Street, #125
Atlanta, GA 30307
404-218-8460

SHEAR STRUCTURAL
931 MONROE DRIVE
SUITE A102-491
ATLANTA, GA 30308
(678) 964-8051
SHEARSTRUCTURAL.COM

ARCADE CITY PARK
PHASE 1 IMPROVEMENTS

ARCADE, GEORGIA

stamp:

revisions

No.	Description	Date

sheet title:

SCHEDULE OF SPECIAL INSPECTIONS

project number: 17-053
drawing date: 02.06.2019
scale as noted

sheet number:

S0-07

☐ NOT ISSUED FOR CONSTRUCTION
■ ISSUED FOR CONSTRUCTION

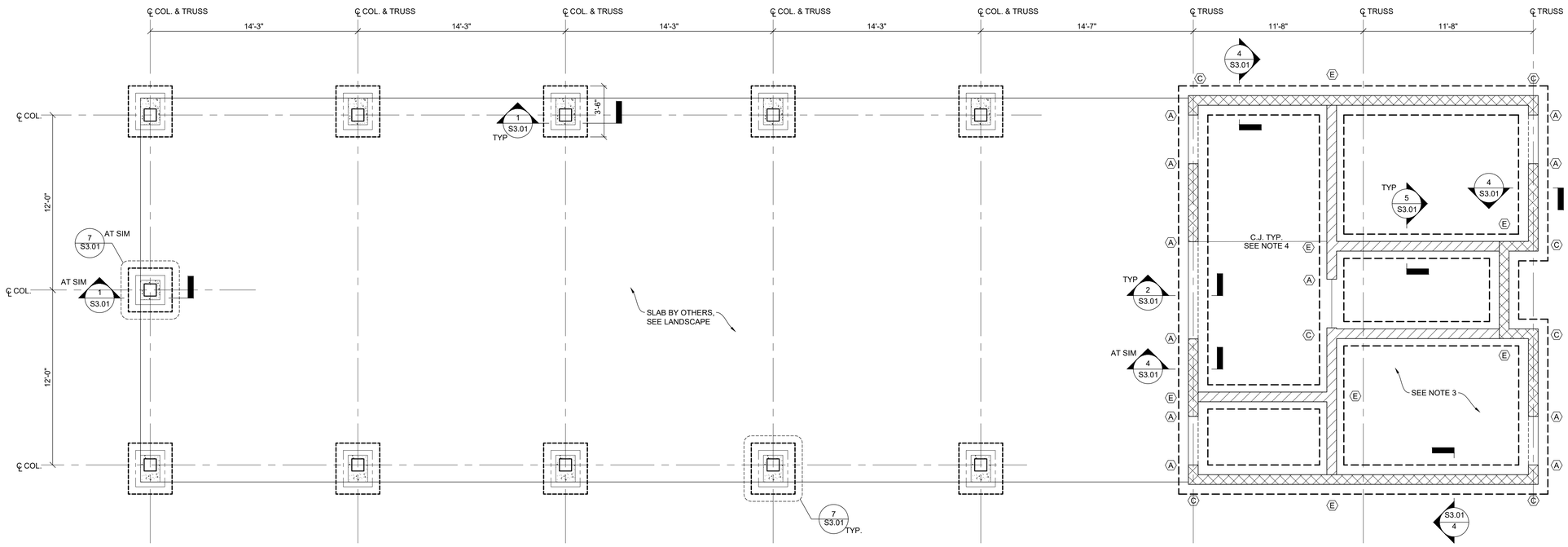

1 S1-01 FOUNDATION PLAN
1/4" = 1'-0"

NOTES:
1. SEE S0-01 FOR STRUCTURAL GENERAL NOTES.
2. SEE ARCH FOR ADDITIONAL INFORMATION AND DIMENSIONS.
3. PROVIDE 4" SLAB ON GRADE REINFORCED WITH WWF 6x6-W2.9xW2.9 ON VAPOR BARRIER AND 4" GRANULAR BASE.
4. C.J. INDICATES SLAB CONTROL JOINT. SEE 3/S3.01 AND GENERAL NOTES FOR ADDITIONAL INFORMATION.
5. PROVIDE REINFORCEMENT AT RE-ENTRANT CORNERS, SEE 6/S3.01.
6. INDICATES 8" LOAD BEARING MASONRY WALLS REINFORCED W/ #5@32" O.C., SEE DETAILS 2, 5 & 7/S6.01.
   INDICATES 8" INTERIOR MASONRY WALLS REINFORCED W/ #4@48" O.C., SEE DETAILS 2, 5 & 7/S6.01.
7. (X) INDICATES MASONRY WALL REINFORCEMENT, SEE DETAILS 10/S6.01.
6. CONTRACTOR SHALL BE RESPONSIBLE FOR COORDINATION OF ALL UTILITY AND PLUMBING LINES. SEE 10/S3.01.
7. T/FOOTING ELEVATION = -1'-4" UNO REFERENCED FROM T/SLAB ELEVATION = 0'-0".
8. SEE 2/S6-01 FOR LINTEL SCHEDULE

wright gardner architect llc
154 Krog Street, #125
Atlanta, GA 30307
404-218-8460

SHEAR STRUCTURAL
931 MONROE DRIVE
SUITE A102-491
ATLANTA, GA 30308
(678) 964-8051
SHEARSTRUCTURAL.COM

ARCADE CITY PARK
PHASE 1 IMPROVEMENTS

ARCADE, GEORGIA

stamp:

revisions

No.	Description	Date

sheet title:

FOUNDATION PLAN

project number: 17-053
drawing date: 02.06.2019
scale as noted

sheet number:

S1-01

☐ NOT ISSUED FOR CONSTRUCTION
■ ISSUED FOR CONSTRUCTION

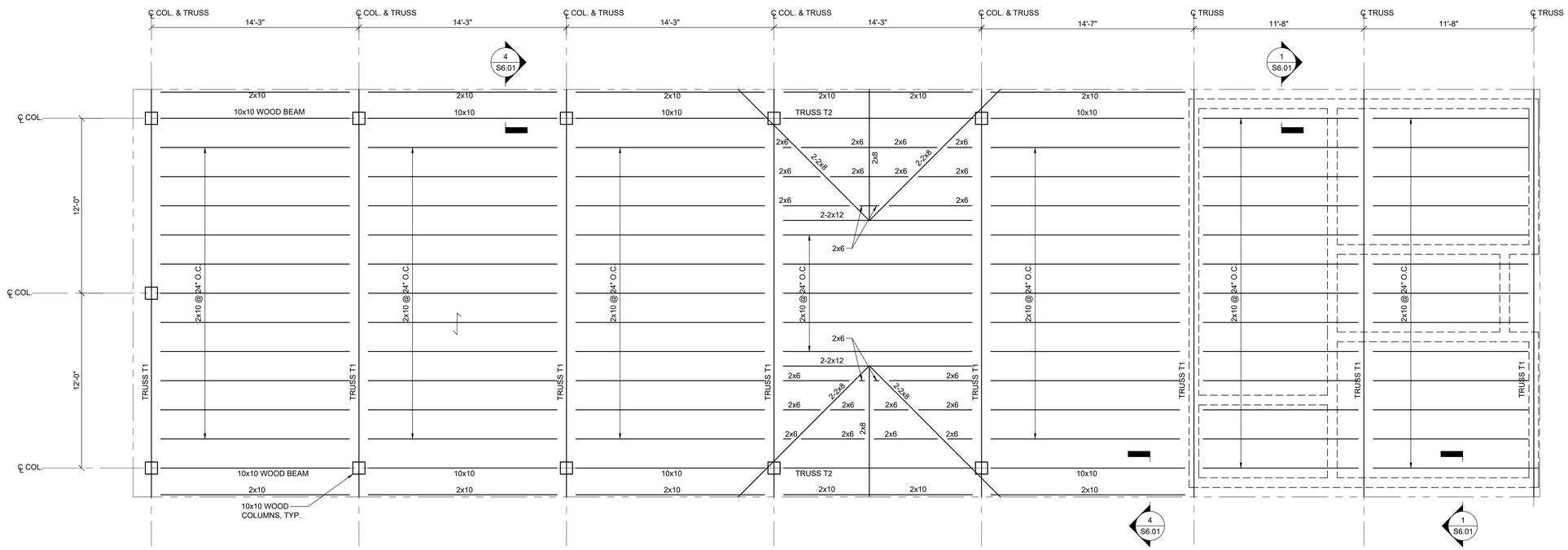

1 / S1-02 ROOF FRAMING PLAN

1/4" = 1'-0"

NOTES:
1. SEE S0.01 FOR STRUCTURAL GENERAL NOTES.
2. SEE ARCH FOR ADDITIONAL INFORMATION AND DIMENSIONS.
3. ←——→ INDICATES DIRECTIONAL SPAN OF 5/8" PLYWOOD SHEATHING, SEE 3/S6.01.
4. TRUSS Tx: INDICATES WOOD TRUSS. SEE SHEET S6.02.

wright gardner architect llc
154 Krog Street, #125
Atlanta, GA 30307
404-218-8460

SHEAR STRUCTURAL
931 MONROE DRIVE
SUITE A102-491
ATLANTA, GA 30308
(678) 964-8051
SHEARSTRUCTURAL.COM

ARCADE CITY PARK PHASE 1 IMPROVEMENTS

ARCADE, GEORGIA

stamp:

revisions

No.	Description	Date

sheet title:

ROOF FRAMING PLAN

project number: **17-053**
drawing date: **02.06.2019**
scale as noted

sheet number:

S1-02

☐ NOT ISSUED FOR CONSTRUCTION
■ ISSUED FOR CONSTRUCTION

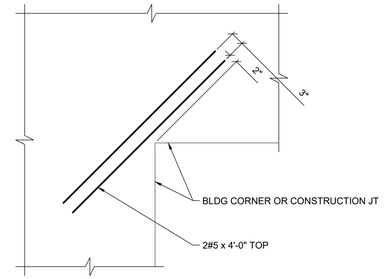

6 S3-01 TYPICAL REINFORCEMENT AT SLAB RE-ENTRANT CORNER
3/4" = 1'-0"

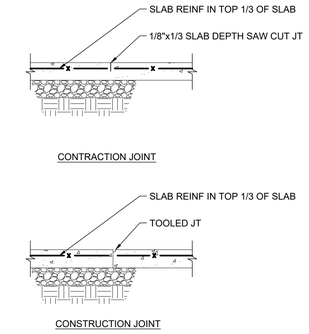

NOTE: SAW CUT OR DISCONTINUE REINF AT CONTRACTION JT

3 S3-01 TYPICAL GRADE SUPPORTED SLAB AT JOINTS
3/4" = 1'-0"

12 S3-01 NOT USED
3/4" = 1'-0"

9 S3-01 NOT USED
3/4" = 1'-0"

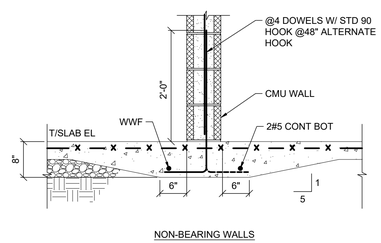

5 S3-01 TYPICAL GRADE SUPPORTED SLAB AT CMU WALL
3/4" = 1'-0"

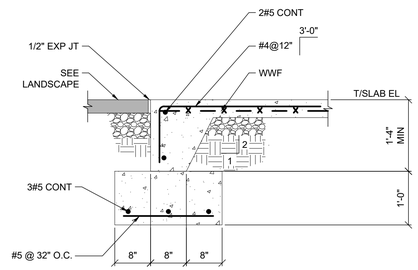

2 S3-01 TYPICAL TURN DOWN SLAB AT DOOR
3/4" = 1'-0"

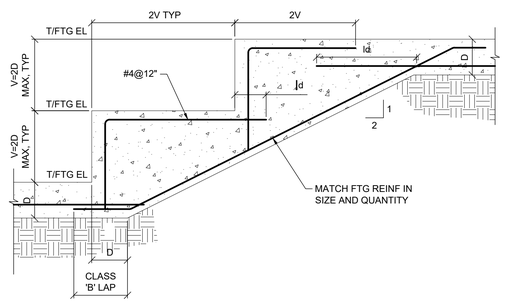

11 S3-01 TYPICAL STEPPED FOOTING BOTTOM REINFORCING
3/4" = 1'-0"

8 S3-01 NOT USED
3/4" = 1'-0"

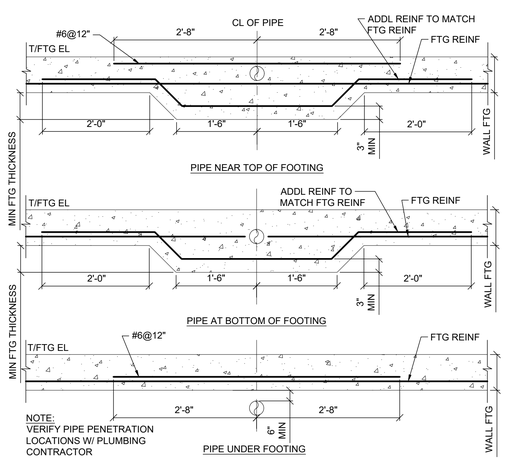

10 S3-01 TYPICAL THICKENED FOOTING AT UNDERGROUND PIPING
3/4" = 1'-0"

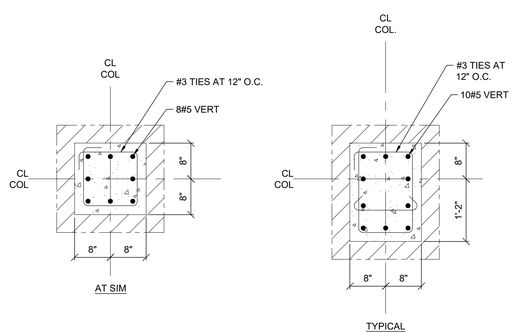

7 S3-01 CONCRETE PEDESTAL DETAIL
3/4" = 1'-0"

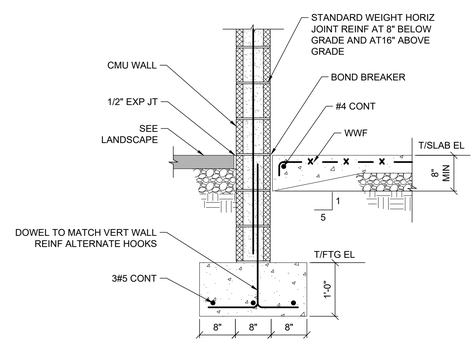

4 S3-01 TYPICAL EXTERIOR 8" CMU WALL FOOTING
3/4" = 1'-0"

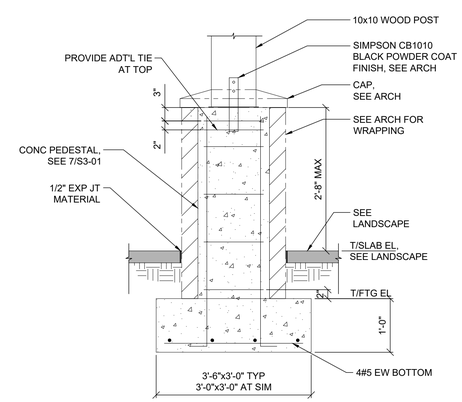

1 S3-01 TYPICAL WOOD COLUMN FOOTING
3/4" = 1'-0"

wright gardner architect llc
154 Krog Street, #125
Atlanta, GA 30307
404-218-8460

SHEAR STRUCTURAL
931 MONROE DRIVE
SUITE A102-491
ATLANTA, GA 30308
(678) 964-8051
SHEARSTRUCTURAL.COM

ARCADE CITY PARK
PHASE 1 IMPROVEMENTS
ARCADE, GEORGIA

stamp:

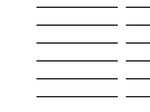

revisions

No.	Description	Date

sheet title:

FOUNDATION DETAILS

project number: 17-053
drawing date: 02.06.2019
scale as noted

sheet number:

S3-01

☐ NOT ISSUED FOR CONSTRUCTION
■ ISSUED FOR CONSTRUCTION

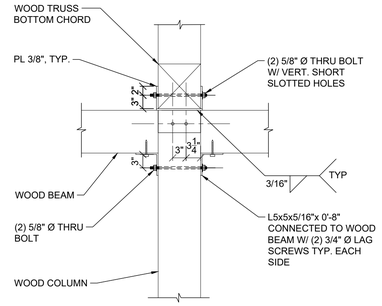

6 S6-01 CONNECTION OF WOOD TRUSS AND BEAM TO COLUMN
3/4" = 1'-0"

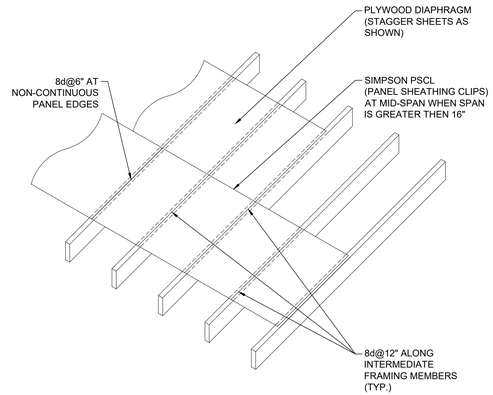

3 S6-01 ROOF DIAPHRAGM DETAIL
3/4" = 1'-0"

12 S6-01 NOT USED
3/4" = 1'-0"

9 S6-01 NOT USED
3/4" = 1'-0"

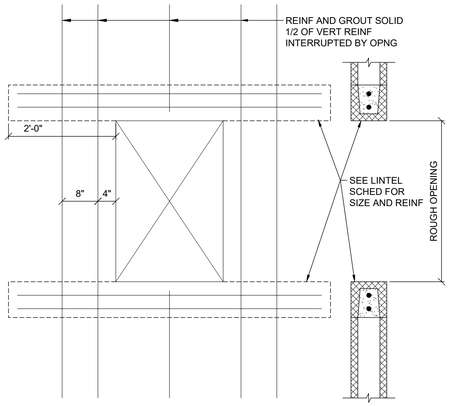

5 S6-01 TYPICAL REINFORCING AT CMU WALL OPENING
3/4" = 1'-0"

STANDARD LINTEL SCHEDULE

WALL SIZE	LINTEL TYPE	REMARKS
OPENINGS UP TO 6'-0"		
8" BLOCK	8"x8" CONC W/ 2#4 T&B 8"x8" U-BLOCK W/ 1#5 T&B	
OPENINGS 6'-0" TO 8'-0"		
8" BLOCK	8"x8" CONC W/ 2#4 T&B 8"x16" U-BLOCK W/ 1#6 T&B	
OPENINGS 8'-0" TO 10'-0"		
8" BLOCK	8"x8" CONC W/ 2#4 T&B	#3 STIR @ 7" CONT

2 S6-01 STANDARD LINTEL SCHEDULE
3/4" = 1'-0"

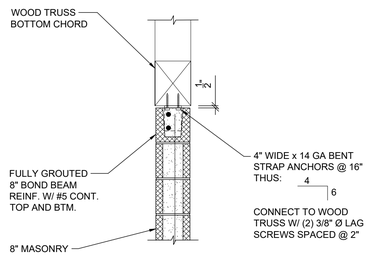

8 S6-01 EXTERIOR WALL SECTION TRUSS PARALLEL TO WALL
3/4" = 1'-0"

11 S6-01 NOT USED
3/4" = 1'-0"

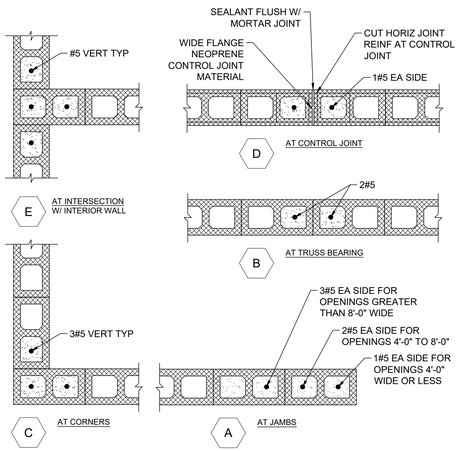

10 S6-01 TYPICAL REINFORCING AT 8" LOAD BEARING CMU WALL
3/4" = 1'-0"

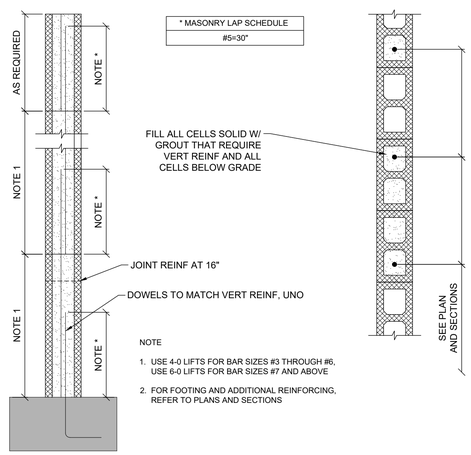

* MASONRY LAP SCHEDULE

#5=30"

NOTE

1. USE 4-0 LIFTS FOR BAR SIZES #3 THROUGH #6, USE 6-0 LIFTS FOR BAR SIZES #7 AND ABOVE
2. FOR FOOTING AND ADDITIONAL REINFORCING, REFER TO PLANS AND SECTIONS

7 S6-01 TYPICAL REINFORCING CMU WALL
3/4" = 1'-0"

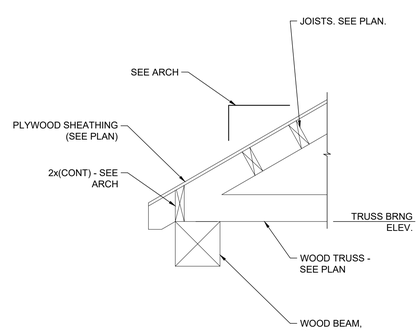

4 S6-01 TRUSS BEARING SECTION @ WOOD BEAM
3/4" = 1'-0"

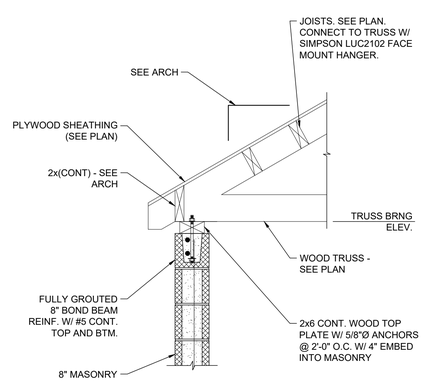

1 S6-01 TRUSS BEARING SECTION @ MASONRY WALL
3/4" = 1'-0"

wright gardner architect llc
154 Krog Street, #125
Atlanta, GA 30307
404-218-8460

SHEAR STRUCTURAL
931 MONROE DRIVE
SUITE A102-491
ATLANTA, GA 30308
(678) 964-8051
SHEARSTRUCTURAL.COM

ARCADE CITY PARK
PHASE 1 IMPROVEMENTS
ARCADE, GEORGIA

stamp:

revisions

No.	Description	Date

sheet title:

FRAMING DETAILS

project number: 17-053
drawing date: 02.06.2019
scale as noted

sheet number:

S6-01

☐ NOT ISSUED FOR CONSTRUCTION
■ ISSUED FOR CONSTRUCTION

12 S6-02 NOT USED
3/4" = 1'-0"

9 S6-02 NOT USED
3/4" = 1'-0"

6 S6-02 NOT USED
3/4" = 1'-0"

3 S6-02 NOT USED
3/4" = 1'-0"

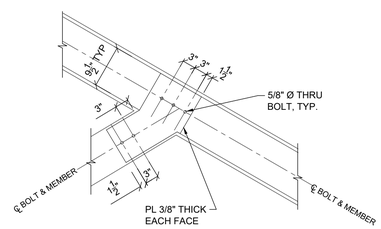

8 S6-02 TRUSS CONNECTION DETAIL
3/4" = 1'-0"

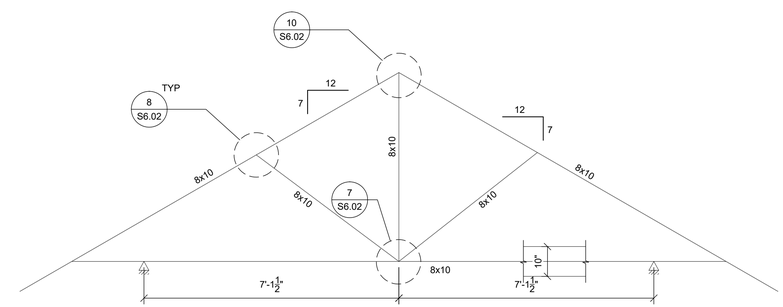

5 S6-02 WOOD TRUSS ELEVATION T2
1/2" = 1'-0"

11 S6-02 NOT USED
3/4" = 1'-0"

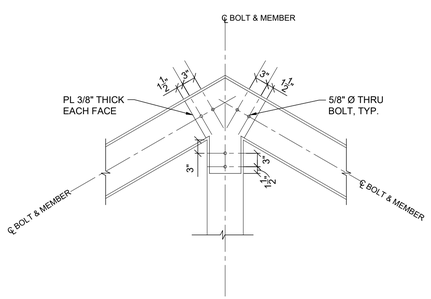

10 S6-02 TRUSS CONNECTION DETAIL
3/4" = 1'-0"

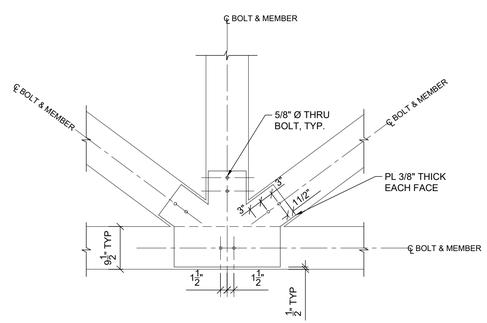

7 S6-02 TRUSS CONNECTION DETAIL
3/4" = 1'-0"

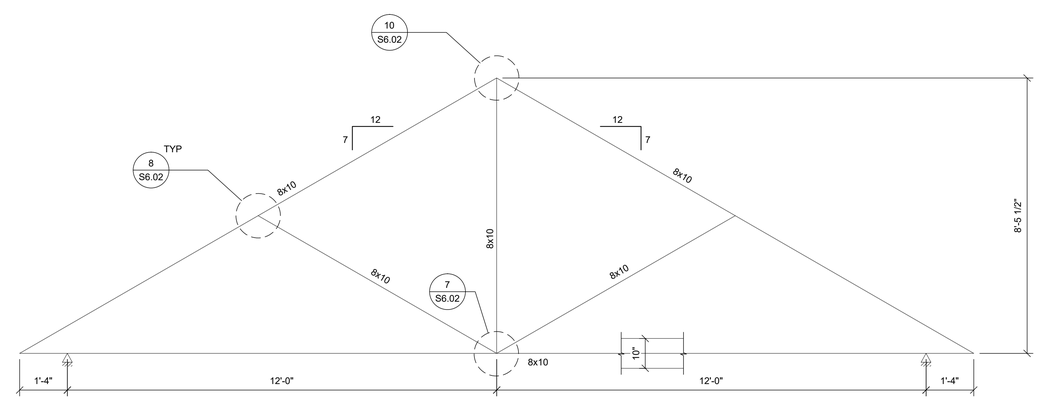

4 S6-02 WOOD TRUSS ELEVATION T1
1/2" = 1'-0"

wright gardner architect llc
154 Krog Street, #125
Atlanta, GA 30307
404-218-8460

SHEAR STRUCTURAL
931 MONROE DRIVE
SUITE A102-491
ATLANTA, GA 30308
(678) 964-8051
SHEARSTRUCTURAL.COM

ARCADE CITY PARK
PHASE 1 IMPROVEMENTS

ARCADE, GEORGIA

stamp:

revisions

No.	Description	Date

sheet title:

FRAMING DETAILS

project number: 17-053
drawing date: 02.06.2019
scale as noted

sheet number:

S6-02

☐ NOT ISSUED FOR CONSTRUCTION
■ ISSUED FOR CONSTRUCTION

ABBREVIATIONS

AAV	AIR ADMITTANCE VALVE	HWR	HOT WATER RETURN
A/C	ABOVE CEILING	IMB	ICE MACHINE BOX
A/F	ABOVE FLOOR	IE	INVERT ELEVATION
AFF, AFG	ABOVE FINISHED FLOOR/GRADE	L, LAV	LAVATORY
B/F	BELOW FLOOR	MBH	1000 BTU/HR
BFP	BACKFLOW PREVENTER	MS	MOP SINK
B/G	BELOW GRADE	MV	MIXING VALVE
CD	CONDENSATE DRAIN	O/H	OVERHEAD
CONT	CONTINUATION	G	NATURAL GAS
CW	COLD WATER	PRV	PRESSURE REDUCING VALVE
DN	DOWN	RP	RECIRCULATION PUMP
ET	EXPANSION TANK	S, SAN	SANITARY
EWC	ELECTRIC WATER COOLER	SH	SHOWER
ex.	EXISTING	SK	SINK
FCO	FLOOR CLEANOUT	TP	TRAP PRIMER
FD	FLOOR DRAIN	TYP	TYPICAL
FHB	FREEZEPROOF HOSE BIBB	UR	URINAL
FS	FLOOR SINK	V	VENT
FWH	FREEZEPROOF WALL HYDRANT	VTR	VENT THROUGH ROOF
GCO	GRADE CLEANOUT	WC	WATER CLOSET
GI	GREASE INTERCEPTOR	W.C.	WATER COLUMN
HB	HOSE BIBB	WCO	WALL CLEANOUT
HD	HUB DRAIN	WHA	WATER HAMMER ARRESTER
HW	HOT WATER	WMB	WASHING MACHINE BOX

LEGEND

	COLD WATER PIPE
	HOT WATER PIPE
	HOT WATER RETURN PIPE
FW	FILTERED WATER PIPE
F	FIRE SPRINKLER PIPE
G	NATURAL GAS PIPE
S	SANITARY PIPE
GW	GREASE WASTE PIPE
OW	OIL WASTE PIPE
EST	EMERGENCY STORM PIPE
ST	STORM PIPE
	VENT PIPE
	PIPE UP / PIPE DOWN
	PIPE TEE FROM TOP / TEE FROM BOTTOM
	PIPE CAP / PIPE CONTINUATION
	DIRECTIONAL FLOW ARROW
	BALL VALVE / CHECK VALVE
	MIXING VALVE / PRESSURE REDUCING VALVE
	BACKFLOW PREVENTER ASSEMBLY
	WALL HYDRANT / HOSE BIBB
	FLOOR DRAIN / FLOOR SINK
	WATER HAMMER ARRESTOR
	GAS COCK / GAS SOLENOID VALVE
CC	P-TRAP
	HUB DRAIN
	TRAP PRIMER
	FLOOR CLEANOUT / GRADE CLEANOUT
	VENT THROUGH ROOF
	PIPE CLEANOUT / WALL CLEANOUT
	CONNECTION TO EXISTING

SPECIFICATIONS

GENERAL
ALL WORK SHALL COMPLY WITH ALL STATE, CITY AND LOCAL CODES, RULES AND REGULATIONS. CONTRACTOR SHALL SECURE ALL REQUIRED PERMITS AND INSPECTIONS ASSOCIATED WITH THIS WORK, AND SHALL PAY ALL COSTS AND FEES INVOLVED.

ALL WORK SHALL BE INSTALLED IN ACCORDANCE WITH THE BEST RECOGNIZED PRACTICE IN THE FIELD CONCERNED. MANUFACTURED ITEMS SHALL BE INSTALLED IN STRICT ACCORDANCE WITH THE MANUFACTURER'S PRINTED DIRECTIONS, SPECIFICATIONS AND RECOMMENDATIONS.

CONTRACTOR SHALL REVIEW ALL CONTRACT DOCUMENTS AND SHALL BE FAMILIAR WITH THE SCOPE AND REQUIREMENTS OF THIS PROJECT. ANY DISCREPANCIES OR LACK OF CLARITY IN THE DOCUMENTS SHALL BE IDENTIFIED TO THE ARCHITECT OR ENGINEER PRIOR TO THE SUBMISSION OF PRICING BIDS. WITH A SUBMITTED BID, CONTRACTOR IS ACCEPTING THESE DOCUMENTS AS SUFFICIENT DEFINITION OF THE SCOPE OF WORK, AND ANY ADDITIONAL COSTS BASED ON UNCLARITY OF CONTRACT DOCUMENTS WILL NOT BE CONSIDERED.

CONTRACTOR SHALL VERIFY ALL DIMENSIONS AND LOCATIONS FOR EQUIPMENT INSTALLATION PRIOR TO THE SUBMITTAL OF SHOP DRAWINGS. ALL EQUIPMENT AND DEVICES SHALL BE INSTALLED SUCH THAT THEY ARE EASILY ACCESSIBLE AND SERVICABLE. THIS EQUIPMENT INCLUDES, BUT IS NOT LIMITED TO: PLUMBING FIXTURES, WATER HEATERS, EXPANSION TANKS, PUMPS, BACKFLOW PREVENTERS, VALVES, MIXING VALVES, THERMOMETERS, GAUGES, TRAP PRIMERS AND CLEANOUTS.

THE CONTRACTOR IS RESPONSIBLE FOR REVIEWING THE FULL SET OF CONSTRUCTION DOCUMENTS, INCLUDING ARCHITECTURAL, STRUCTURAL, CIVIL, MECHANICAL & ELECTRICAL DRAWINGS (AS APPLICABLE) TO ENSURE ALL PLUMBING WORK IS COORDINATED WITH PHYSICAL CONDITIONS AND ALL OTHER TRADES.

THE CONTRACTOR IS RESPONSIBLE FOR REVIEWING THE ARCHITECTURAL DRAWINGS TO ENSURE THERE IS ADEQUATE WALL THICKNESS SUCH THAT ALL PIPING, FIXTURE CARRIERS, WALL CLEANOUTS, WALL BOXES, WALL HYDRANTS AND ACCESS PANELS WILL FIT IN THE WALL SPACE. CONTRACTOR SHALL NOTIFY THE ARCHITECT IF WALL SPACE IS INADEQUATE PRIOR TO COMMENCING WORK.

THE CONTRACTOR SHALL OBTAIN EXACT WALL, FIXTURE, AND LAYOUT DIMENSIONS FROM THE ARCHITECTURAL DRAWINGS. THE CONTRACTOR IS RESPONSIBLE FOR OBTAINING ROUGH-IN AND INSTALLATION DRAWINGS FOR ALL PLUMBING FIXTURES, KITCHEN EQUIPMENT AND OWNER FURNISHED EQUIPMENT (AS APPLICABLE), AND SHALL COORDINATE THE PLUMBING INSTALLATION PRIOR TO COMMENCING THE WORK. THE CONTRACTOR IS RESPONSIBLE FOR PROVIDING AND INSTALLING ALL NECESSARY VALVES, CONNECTIONS, TRAPS, ACCESS PANELS, UNIONS, ESCUTCHEONS, WATER HAMMER ARRESTORS, VACUUM BREAKERS, RELIEF VALVES, PIPE INSULATION, AND EQUIPMENT SPECIALTY DEVICES AS REQUIRED TO FACILITATE COMPLETE AND OPERATIONAL CONDITIONS WHICH ARE IN STRICT COMPLIANCE WITH THE MANUFACTURER'S INSTALLATION INSTRUCTIONS.

THESE DRAWINGS ARE DIAGRAMMATIC AND DO NOT REFLECT ALL POSSIBLE PHYSICAL CONDITIONS. REFER TO ARCHITECTURAL DRAWINGS FOR ALL DIMENSIONS AND EXACT LOCATIONS OF EQUIPMENT AND FIXTURES. PROVIDE NECESSARY PIPING OFFSETS TO COORDINATE WITH THE BUILDING STRUCTURE, WORK OF OTHER TRADES, AND CONNECTION TO SITE UTILITIES (AS APPLICABLE).

COORDINATE THE ELECTRICAL REQUIREMENTS AND CHARACTERISTICS OF ALL PLUMBING EQUIPMENT WITH THE ELECTRICAL CONTRACTOR PRIOR TO ISSUING SUBMITTALS OR PURCHASING EQUIPMENT.

UNLESS NOTED OTHERWISE, ALL DRAINAGE PIPING SHALL BE SLOPED AT A MINIMUM OF 1/4" PER FOOT. 2" SANITARY PIPING AND ALL GREASE WASTE PIPING SHALL BE SLOPED AT 1/4" PER FOOT.

DOMESTIC WATER PIPING SHALL BE PURGED OF DELETERIOUS MATTER AND DISINFECTED PRIOR TO UTILIZATION. PIPING TO BE FLUSHED AND STERILIZED IN ACCORDANCE WITH IPC 610.1 AND ALL APPLICABLE LOCAL AND STATE HEALTH DEPARTMENT STANDARDS.

ALL DOMESTIC WATER PIPING SUBJECT TO FREEZING SHALL BE INSULATED AND PROVIDED WITH HEAT TRACE. CONDENSATE PIPING SUBJECT TO FREEZING WITHIN WALK-IN FREEZERS SHALL BE INSULATED AND PROVIDED WITH HEAT TRACE. PIPING INSTALLED IN EXTERIOR WALLS SHALL BE WRAPPED IN PIPE INSULATION AND BE LOCATED ON THE INTERIOR SIDE OF THE BUILDING INSULATION.

PIPE PENETRATIONS THROUGH FIRE RATED WALLS OR FLOORS SHALL HAVE EQUIVALENTLY RATED SLEEVES AND SHALL BE SEALED AND FIRE CAULKED WITH A U.L. LISTED FIRE STOPPING SYSTEM INSTALLED IN ACCORDANCE WITH THE MANUFACTURER'S LISTED DETAILS AND SPECIFICATIONS.

THE CONTRACTOR IS RESPONSIBLE FOR COORDINATING WITH THE REQUIREMENTS OF THE COUNTY HEALTH DEPARTMENT AND OTHER LOCAL AUTHORITIES HAVING JURISDICTION REGARDING CROSS CONNECTION CONTROL OR OBTAINING A FOOD SERVICE PERMIT (AS APPLICABLE). REPORT ANY OBSERVED DISCREPANCIES TO THE ARCHITECT OR ENGINEER PRIOR TO COMMENCING WITH THE WORK.

CONTRACTOR SHALL CONFIRM PLUMBING FIXTURE FINISHES WITH THE ARCHITECTURAL SCHEDULES & DETAILS (AS APPLICABLE).

SUBMITTALS
FURNISH SHOP DRAWINGS FOR MANUFACTURED PRODUCTS. ALL ITEMS SHALL BE CLEARLY MARKED TO MATCH EQUIPMENT MARKS ON THE PLUMBING DRAWINGS. ALL OPTIONS MUST BE CLEARLY MARKED ON THE SUBMITTAL SHEET. A MODEL NUMBER LISTING ON A COVER SHEET IS NOT AN ACCEPTABLE SUBSTITUTE FOR MARKING THE ACTUAL SUBMITTAL SHEET. ELECTRICAL DATA FOR POWERED EQUIPMENT MUST BE INDICATED ON THE SUBMITTAL SHEET FOR THAT ITEM.

ALL ITEMS MUST BE SUBMITTED IN ONE PACKAGE AT THE SAME TIME, IN ELECTRONIC PDF FORMAT. SEPARATE SUBMITTALS FOR FIXTURES AND EQUIPMENT IS NOT ACCEPTABLE.

SUBMITTAL REVIEW IS CONSIDERED A GENERAL ACCEPTANCE OF THE BASIC APPLICABILITY OF THE EQUIPMENT. CONTRACTOR IS RESPONSIBLE FOR THE INSTALLATION AND/OR ALTERNATE ARRANGEMENT OF THE EQUIPMENT WITHIN A GIVEN SPACE. WHEN SUBSTITUTED EQUIPMENT IS INSTALLED, CONTRACTOR SHALL BE RESPONSIBLE FOR ANY COORDINATION OR ADDITIONAL COST BROUGHT ON BY THE USE OF THIS EQUIPMENT.

HANGERS AND SUPPORTS
HANGERS SHALL BE COMPLETE WITH RODS AND SUPPORTS PROPORTIONED TO THE SIZE OF PIPE TO BE SUPPORTED, IN ACCORDANCE WITH THE MANUFACTURER'S RECOMMENDATIONS.

SIZE HANGERS FOR INSULATED PIPING TO BEAR ON OUTSIDE OF INSULATION. PROVIDE INSULATION PROTECTORS AT HANGERS BEARING ON THE OUTSIDE OF INSULATION. PROVIDE A RIGID INSERT OR RIGID INSULATION AT EACH INSULATION PROTECTOR.

WHERE SEVERAL PIPES 2 1/2" AND SMALLER RUN PARALLEL AND IN THE SAME PLANE, THEY MAY BE SUPPORTED ON GANG OR MULTIPLE HANGERS. LARGER PIPING SHALL BE INDEPENDENTLY HUNG, RUN PARALLEL AND BE EQUALLY SPACED.

PIPING SHALL BE SUPPORTED IN ACCORDANCE WITH IPC SECTION 308, AND SPACING OF HANGERS SHALL NOT EXCEED THE LIMITS SET FORTH IN TABLE 308.5. PIPES SHALL BE SUPPORTED WITHIN 1'-0" OF EACH ELBOW.

VERTICAL PIPE SUBJECT TO MOVEMENT SHALL BE SUPPORTED FROM THE WALL BY MEANS OF A PIPE CLAMP.

SUPPORT DOMESTIC WATER PIPING IN SPACES BEHIND PLUMBING FIXTURES BY BRACKETS AND U-BOLTS SECURED TO WASTE AND VENT STACKS. SIZE U-BOLTS TO BEAR ON THE PIPING.

AFTER HANGER RODS ARE INSTALLED IN FINISHED CONCRETE CEILING, FILL THE REMAINING OPENING WITH CEMENT SO THAT NO HOLE SHOWS AT THE CEILING.

WHERE COPPER PIPING IS USED, NONFERROUS METAL SUPPORT(S) OR PROPER ISOLATION BETWEEN DISSIMILAR MATERIALS SHALL BE PROVIDED.

PIPE HANGERS AND SUPPORTS SHALL BE FURNISHED AND INSTALLED IN ACCORDANCE WITH RECOMMENDATIONS SET FORTH IN MANUFACTURER'S STANDARDIZATION SOCIETY STANDARD PRACTICES NO. SP-69 AND SP-58.

SLEEVES
SLEEVES SHALL BE PROVIDED WHERE PIPES PASS THROUGH WALLS, FLOORS AND ROOFS.
PROVIDE STANDARD WEIGHT STEEL SLEEVES IN CONCRETE AND MASONRY CONSTRUCTION, PROVIDE 26GA GALVANIZED SHEET METAL SLEEVES IN INTERIOR DRYWALL CONSTRUCTION. SLEEVES SHALL BE THE FULL THICKNESS OF WALLS AND SHALL ALLOW FOR THE FULL THICKNESS OF PIPE INSULATION, WHERE APPLICABLE.

SLEEVES MAY BE OMITTED WHEN OPENINGS ARE CORE DRILLED FOR CONCEALED VERTICAL AND HORIZONTAL PIPING. SLEEVES ARE NOT REQUIRED AT INDIVIDUAL PLUMBING FIXTURES OR IN CONCRETE FLOOR SLABS ON GRADE, UNLESS OTHERWISE NOTED.

SLEEVES FOR ALL PIPING PENETRATING FIRE RATED WALLS AND FLOORS SHALL BE PROVIDED WITH 3M PIPE BARRIER NO. CP-25 FIRE PROOFING CAULKING, OR EQUAL, IN ANNULAR SPACE BETWEEN SLEEVE AND PIPING. CONTRACTOR SHALL VERIFY THE RATING OF THE WALL AND CONFIRM THE PENETRATION PROTECTION PROVIDED MEETS THAT RATING.

PENETRATIONS THROUGH OUTSIDE WALLS SHALL BE WATERTIGHT. CAULK BETWEEN PLUMBING PIPE AND SLEEVE. PACK WITH FIBERGLASS AND CAULK, 1" DEEP AT EACH FACE WITH NON-HARDENING SEALANT BETWEEN PIPE AND SLEEVE.

SPECIFICATIONS

WASTE AND VENT PIPING SYSTEMS AND ACCESSORIES
SANITARY PIPING SHALL BE PVC SCHEDULE 40 SOLID WALL PIPE AND DWV FITTING SYSTEM.

PIPE AND FITTINGS SHALL BE MANUFACTURED FROM PVC COMPOUND WITH A CELL CLASS OF 12454 PER ASTM D-1784 AND CONFORM WITH NATIONAL SANITATION FOUNDATION (NSF) STANDARD 14. PIPE SHALL BE IRON PIPE SIZE (IPS) CONFORMING TO ASTM D-1785 AND ASTM D-2665. INJECTION MOLDED FITTINGS SHALL CONFORM TO ASTM D-2665. FABRICATED FITTINGS SHALL CONFORM TO ASTM F-1866. SOLVENT CEMENTS SHALL CONFORM TO ASTM D-2564. PRIMER SHALL CONFORM TO ASTM F-656.

WASTE AND VENT PIPING SHALL BE TESTED IN ACCORDANCE WITH THE GOVERNING CODES. AT A MINIMUM, WASTE PIPING SHALL BE TESTED WITH AT LEAST 10 FOOT OF WATER HEAD PRESSURE APPLIED. TESTING WITH AIR IS NOT ALLOWED.

ALL VENTS THROUGH ROOF SHALL BE LOCATED AT LEAST 10'-0" AWAY FROM ANY AIR INTAKE, EVAPORATIVE COOLER, OR ANY OTHER DEVICE THAT WOULD DRAW AIR FROM THE VENT. FLASH AROUND ALL PIPES PENETRATING THROUGH ROOF WITH STANDARD MANUFACTURED FLASHINGS. FLASHING SHALL BE SHEET METAL WITH RUBBER GASKETS AND SHALL EXTEND INTO ROOFING AND UP PIPE DISTANCES IN ACCORDANCE WITH THE LOCAL CODE.

NO DOUBLE COMBINATION FITTINGS MAY BE UTILIZED IN THE HORIZONTAL.

WHERE TWO HORIZONTAL PIPES (BACK-TO-BACK WATER CLOSETS OR TWO SANITARY BRANCHES) COMBINE IN THE VERTICAL, A DOUBLE COMBINATION WYE EIGHTH BEND FITTING SHALL BE INSTALLED. DOUBLE SANITARY TEE OR SANITARY CROSS IS NOT ACCEPTABLE.

WHERE DRAWINGS REQUIRE CONNECTION TO EXISTING SANITARY SEWER PIPING IN BUILDING, IT IS THE CONTRACTOR'S RESPONSIBILITY TO FIELD DETERMINE EXACT LOCATION, DEPTH AND DIRECTION OF FLOW PRIOR TO COMMENCING WORK. PROVIDE SCOPING OF BELOW FLOOR PIPING AS NECESSARY TO GATHER THIS INFORMATION. CONTRACTOR SHALL ALERT ENGINEER IF THERE IS A POTENTIAL ISSUE MAINTAINING PROPER SLOPE IN CONNECTING TO EXISTING, OR IF THERE IS A MORE DIRECT CONNECTION POSSIBLE.

DOMESTIC WATER SYSTEMS AND ACCESSORIES
WATER PIPING ABOVE SLAB: TYPE 'L' HARD DRAWN COPPER TUBING, ASTM B88, WROUGHT SOLDER JOINTS, ANSI B16.22.

WATER PIPING BELOW SLAB: TYPE 'K SOFT DRAWN COPPER TUBING, WITH NO JOINTS BELOW SLAB, ASTM B88.

ALL DOMESTIC HOT WATER PIPING SHALL HAVE A MINIMUM PRESSURE RATING OF 100PSI AT 180°F.

DOMESTIC WATER PIPING SHALL BE TESTED IN ACCORDANCE WITH ALL GOVERNING CODES. PIPING SHALL BE PURGED OF DELETERIOUS MATTER AND DISINFECTED PRIOR TO UTILIZATION. PIPING TO BE FLUSHED AND STERILIZED IN ACCORDANCE WITH IPC 610.1 AND ALL APPLICABLE LOCAL AND STATE HEALTH DEPARTMENT STANDARDS.

BALL VALVES SHALL BE TWO-PIECE BRONZE BODY, LARGE PORT WITH SOLID, SMOOTH BORE CHROME PLATED BRASS BALL. SEATS SHALL BE REINFORCED TFE WITH TEFLON PACKING RING AND THREADED ADJUSTABLE PACKING NUT. PROVIDE STEM EXTENSION AS NEEDED TO PROVIDE HANDLE ON OUTSIDE OF PIPE INSULATION. VALVES SHALL BE APOLLO 70 OR EQUAL.

BACKFLOW PREVENTERS SHALL BE INSTALLED IN ACCESSIBLE LOCATIONS FOR EASE OF TESTING AND SERVICING. FOR BACKFLOW PREVENTERS WITH VENT CONNECTIONS, ROUTE VENT LINE TO NEAREST DRAIN AND DISCHARGE WITH AIR GAP. BACKFLOW PREVENTERS SHALL BE TESTED IN ACCORDANCE WITH IPC 312.10.2. CONTRACTOR SHALL PROVIDE CERTIFICATIONS THAT STATE DEVICES HAVE BEEN TESTED AND APPROVED.

THERMOMETERS SHALL BE 9" ADJUSTABLE ANGLE, 30°-180°F RANGE (TRERICE BX9 OR EQUAL). PRESSURE GAUGES SHALL BE 4 1/2" DIAL SIZE, 0-160PSI (TRERICE 600CB OR EQUAL).

CONTRACTOR SHALL FIELD VERIFY INCOMING DOMESTIC WATER PRESSURE. WHERE PRESSURE EXCEEDS 80PSI, PROVIDE PRESSURE REGULATING VALVE (WATTS LF223) AND UPSTREAM STRAINER (WATTS LSF777).

CONTRACTOR SHALL FIELD COORDINATE LOCATION OF ACCESSIBLE ISOLATION VALVES ON DOMESTIC HOT & COLD WATER SUPPLIES TO FIXTURES OR GROUPS OF FIXTURES SUCH THAT THEY MAY BE SHUT OFF FOR SERVICING. SERVICE AND HOSE BIBB VALVES SHALL BE IDENTIFIED. ALL OTHER VALVES INSTALLED IN LOCATIONS THAT ARE NOT ADJACENT TO THE FIXTURE(S) SHALL BE IDENTIFIED, INDICATING THE FIXTURE(S) SERVED.

INSULATION
INSULATE ALL DOMESTIC HOT WATER AND HOT WATER RECIRCULATION PIPING IN ACCORDANCE WITH IECC TABLE C403.2.10. PIPE UP TO 1 1/4": 1" THICK INSULATION. PIPE 1 1/2" OR LARGER: 1 1/2" THICK INSULATION

INSULATE ALL HORIZONTAL COLD WATER PIPING LOCATED ABOVE CEILING, VERTICAL PIPING LOCATED IN AN EXTERIOR WALL, EXPOSED PIPING (I.E. MECH ROOMS). PIPE UP TO 1": 1/2" THICK. PIPING 1 1/4" AND OVER: 1" THICK INSULATION. INSULATION MAY BE OMITTED FOR HORIZONTAL CPVC PIPING LESS THAN 1 1/4".

INSULATION SHALL HAVE A K-FACTOR (AVERAGE THERMAL CONDUCTIVITY) NOT TO EXCEED 0.27 BTU-IN/HR x SQFT x °F.

TANK TYPE WATER HEATERS
WATER HEATERS SHALL BE U.L. LISTED AND SHALL MEET OR EXCEED THE STANDBY LOSS REQUIREMENTS OF U.S. DEPT. OF ENERGY AND CURRENT EDITION OF ASHRAE/IESNA 90.1.

WATER HEATERS SHALL HAVE 150PSI WORKING PRESSURE AND BE EQUIPPED WITH EXTRUDED HIGH DENSITY ANODE ROD AND HIGH TEMPERATURE CUTOFF SWITCH. WATER HEATERS SHALL BE THERMOSTATICALLY CONTROLLED AND SET TO 120° UNLESS OTHERWISE NOTED. WATER HEATERS SHALL BE INSTALLED ON SUSPENDED PLATFORM, STEEL STAND OR CONCRETE PAD, AS INDICATED ON DRAWINGS.

WATER HEATERS SHALL HAVE A MINIMUM 3 YEAR LIMITED WARRANTY.

WATER HEATERS SHALL BE INSTALLED LEVEL AND PLUMB. FIELD COORDINATE EXACT WATER HEATER LOCATION. MAINTAIN MANUFACTURER'S RECOMMENDED CLEARANCES, AND INSTALL SUCH THAT CONTROLS AND DEVICES ARE ACCESSIBLE FOR SERVICING.

INSTALL SHUTOFF VALVES IN COLD WATER INLET AND HOT WATER OUTLET. INSTALL THERMOMETER ON HOT WATER OUTLET. WATER HEATER SHALL HAVE ASME RATED COMBINATION TEMPERATURE AND PRESSURE RELIEF VALVE IN TOP PORTION OF TANK (FACTORY OR FIELD INSTALLED). PIPE RELIEF VALVE OUTLET TO FLOOR DRAIN, MOP SINK, INDIRECT WASTE RECEPTOR OR TO EXTERIOR. MAINTAIN CONTINUOUS DOWNWARD PITCH TOWARD DISCHARGE LOCATION, AND PROVIDE AIR GAP AT DISCHARGE LOCATION. WHERE WATER HEATER DRAIN PAN IS INDICATED ON PLANS, ROUTE DRAIN TO SAME LOCATION AS RELIEF VALVE AND DISCHARGE WITH AIR GAP.

wright gardner architect llc
154 Krog Street, #125
Atlanta, GA 30307
404-218-8460

PROFICIENT ENGINEERING
6991 Peachtree Industrial Blvd Building 700
Peachtree Corners, Georgia 30092
404.330.9798
PROJECT # 118270

ARCADE CITY PARK
PHASE 1 IMPROVEMENTS
ARCADE, GEORGIA

stamp:

GEORGIA REGISTERED PROFESSIONAL ENGINEER MIKE ROEDER 35968

revisions

No.	Description	Date

sheet title:

GENERAL

project number: 17-053
drawing date: 02.06.2019
scale: as noted

sheet number:

P0-01

☐ NOT ISSUED FOR CONSTRUCTION
■ ISSUED FOR CONSTRUCTION

LAVATORY TRAP PRIMER

NO SCALE

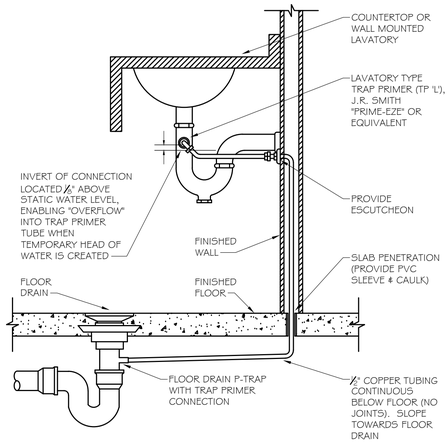

STAND MOUNTED ELECTRIC WATER HEATER

NO SCALE

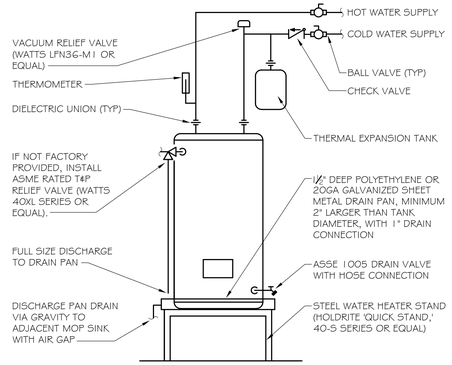

VENT THROUGH ROOF (VTR)

NO SCALE

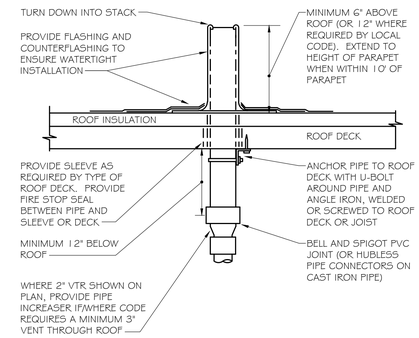

IT IS THE CONTRACTOR'S RESPONSIBILITY TO USE PROPER INSTALLATION METHODS TO ENSURE ROOF PENETRATION IS WATERTIGHT. LOCATE VTR MINIMUM FIFTEEN FEET (15'-0") HORIZONTAL FROM ANY FRESH AIR INTAKE, AND ONE FOOT FROM ANY VERTICAL SURFACE. LOCATE VTR MINIMUM 18" FROM PARAPET, EXPANSION JOINT, EQUIPMENT CURB, ETC. OFFSET IN CEILING SPACE WHERE REQUIRED TO MEET THESE CONDITIONS.

WASTE/VENT ISOMETRIC

NO SCALE

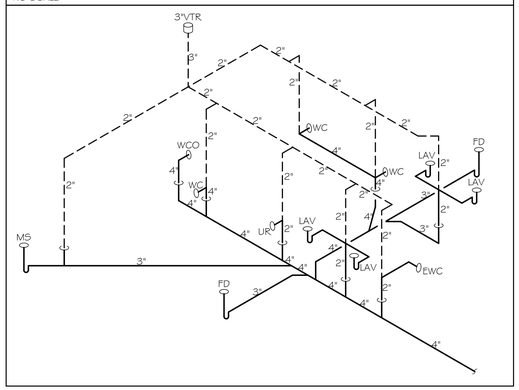

PLUMBING FIXTURE SCHEDULE

MARK	DESCRIPTION	WASTE RUNOUT	WASTE CONN.	VENT	WATER RUNOUT CW	WATER RUNOUT HW	WATER CONN. CW	WATER CONN. HW	SPECIFICATION
L-1	LAVATORY (ADA) - WALL HUNG	2"	1 1/2"	2"	1/2"	1/2"	3/8"	3/8"	WALL HUNG LAVATORY (AMERICAN STANDARD "LUCERNE," 0355.012) WITH CONCEALED ARM CARRIER MOUNTING (ZURN 21231). PROVIDE 0.5GPM SINGLE HANDLE FAUCET WITH POLISHED CHROME FINISH (DELTA 501LF-HGHMHDF). HANDICAP DRAIN OFFSET W/GRID DRAIN (ZURN Z8746-PC) AND CHROME PLATED P-TRAP (ZURN Z8701-PC). CHROME PLATED BRASS ANGLE SUPPLY STOPS WITH FLEX SUPPLIES (MCGUIRE H165). INSULATE OFFSET, TRAP AND SUPPLY LINES (TRUEBRO "LAVGUARD," #103 E-Z). PROVIDE MIXING VALVE TO TEMPER HOT WATER TO 110 DEGREES (LAWLER TMM, ASSE 1070, LEAD FREE).
WC-1	WATER CLOSET - WALL MOUNT W/FLUSH VALVE	4"	3"	2"	1"	---	1"	---	WALL MOUNTED, FLUSH VALVE WATER CLOSET & FLUSHOMETER COMBO (SLOAN WETS-2450.1010), WHITE VITREOUS CHINA. TOP OF RIM AT 15" AFF. PROVIDE HEAVY DUTY OPEN FRONT SEAT, LESS COVER. EQUIPPED WITH 1.28 GPF EXPOSED WATER CLOSET FLUSHOMETER, CHROME PLATED. ORIENT HANDLE TOWARD THE WIDE SIDE OF THE STALL.
WC-2	WATER CLOSET (ADA) - WALL MOUNT W/FLUSH VALVE	4"	3"	2"	1"	---	1"	---	WALL MOUNTED, ADA FLUSH VALVE WATER CLOSET & FLUSHOMETER COMBO (SLOAN WETS-2450.1010), WHITE VITREOUS CHINA. TOP OF RIM AT 16-1/2" AFF. PROVIDE HEAVY DUTY OPEN FRONT SEAT, LESS COVER. EQUIPPED WITH 1.28 GPF EXPOSED WATER CLOSET FLUSHOMETER, CHROME PLATED. ORIENT HANDLE TOWARD THE WIDE SIDE OF THE STALL.
UR-1	URINAL - HIGH EFFICIENCY, WALL MOUNTED W/SENSOR FLUSH VALVE	2"	2"	2"	3/4"	---	3/4"	---	WALL MOUNTED, FLUSH VALVE URINAL & FLUSHOMETER COMBO (WEUS-1000.1403), WHITE VITREOUS CHINA. HIGH EFFICIENCY WATERSENSE' LISTED. PROVIDE ZURN 1222 SUPPORT SYSTEM. COORDINATE MOUNTING HEIGHT(S) AND ADA DESIGNATIONS WITH ARCHITECTURAL DRAWINGS. EQUIPPED WITH 0.125 GPF URINAL FLUSHOMETER (SENSOR OPERATED, BATTERY POWERED), CHROME PLATED.
EWC-1	WATER COOLER, BI-LEVEL (ADA), INDOOR/OUTDOOR	2"	1 1/2"	2"	1/2"	---	3/8"	---	BI-LEVEL INDOOR/OUTDOOR VANDAL RESISTANT/FROST RESISTANT WATER COOLER (ELKAY VRCTLFR8SC). ORIFICES AT 39 1/2" AND 31 7/8" AFF. 1 1/2" 17GA CHROME PLATED P-TRAP W/CLEANOUT (ZURN Z8702-PC). MOUNT WITH WALL CARRIER (ZURN 1225-BL). FROST PROTECTION TESTED AT 32°F WITH NO WIND. CONTRACTOR SHALL COMMUNICATE TO THE OWNER THAT IT IS THE OWNER'S RESPONSIBILITY TO PROTECT THE UNIT DURING PROLONGED TIMES BELOW FREEZING.
MS-1	MOP SINK	3"	3"	2"	1/2"	1/2"	1/2"	1/2"	24"X24" FLOOR BASIN (FIAT MSB-2424) AND SERVICE FAUCET WITH VACUUM BREAKER, INTEGRAL STOPS, PAIL HOOK AND 3/4" HOSE THREAD ON SPOUT (830-AA). PROVIDE HOSE AND BRACKET (832-AA), MOP HANGER (889-CC), STAINLESS STEEL BUMPERGUARD (E-88-AA) AND STAINLESS STEEL WALL GUARD (MSG2424).
FD-1	FLOOR DRAIN - GENERAL PURPOSE	3"	3"	2"	---	---	---	---	GENERAL PURPOSE FLOOR DRAIN (J.R. SMITH #2005) WITH FLASHING COLLAR, ADJUSTABLE STRAINER HEAD & 5" ROUND NICKEL BRONZE STRAINER. PROVIDE SQUARE STRAINER FOR TILE APPLICATIONS. WHERE TRAP PRIMER IS SHOWN ON PLAN, PROVIDE TRAP PRIMER CONNECTION (-P050)
WCO	WALL CLEANOUT	4"	4"	---	---	---	---	---	CLEANOUT PLUG AND COVER TO BE INSTALLED ON SANITARY TEE (J.R. SMITH 4472). CAST BRONZE TAPERED THREAD PLUG WITH STAINLESS STEEL ROUND COVER.
BFP-1	BACKFLOW PREVENTER (DOUBLE CHECK)	---	---	---	see plan	---	see plan	---	DOUBLE CHECK BACKFLOW PREVENTER WITH TWO POSITIVE SEATING CHECK MODULES AND TEST COCKS (WATTS LF007). LEAD FREE. ASSEMBLY SHALL INCLUDE TWO ISOLATION VALVES AND STRAINER. CONFORMS TO ASSE STANDARD 1015.
TP-L	LAVATORY TYPE TRAP PRIMER	1/2"	1/2"	---	---	---	---	---	LAVATORY TRAP PRIMER SYSTEM WITH P-TRAP AND 1/2" PRIME TUBE WITH WALL ESCUTCHEON (J.R. SMITH "PRIME-EZE"). ASSE STANDARD 1044.
ET-1	POTABLE WATER EXPANSION TANK	---	---	---	3/4"	---	3/4"	---	LEAD-FREE POTABLE WATER EXPANSION TANK (WATTS PLT-5). 2.1 GALLONS TOTAL VOLUME, 0.8 GALLONS MAXIMUM ACCEPTANCE VOLUME. TANK SHALL BE PRE-CHARGED TO THE SYSTEM PRESSURE PRIOR TO INSTALLATION (CONTRACTOR TO FIELD-VERIFY).
IMB-1	ICE MAKER/REFRIGERATOR BOX	---	---	---	1/2"	---	1/2"	---	ICE MAKER CONNECTION BOX (OATEY #391xx SERIES), 6"X6". LOW LEAD. 1/4 TURN BRASS VALVE WITH INTEGRAL FACTORY INSTALLED WATER HAMMER ARRESTOR. PROVIDE BACKFLOW PREVENTER IN SUPPLY LINE (WATTS 'SD3,' ASSE 1022)
FWH-1	FREEZEPROOF WALL HYDRANT IN BOX	---	---	---	3/4"	---	3/4"	---	CONCEALED 3/4" HOSE CONNECTION IN WALL BOX, WITH INTEGRAL AUTOMATIC DRAINING, ANTI-SIPHON VACUUM BREAKER (J.R. SMITH 5509QT). LENGTH TO SUIT WALL THICKNESS. PROVIDED WITH QUARTER TURN, SQUARE FITTING, T-HANDLE KEY.

ELECTRIC WATER HEATER SCHEDULE

MARK	TANK CAPACITY	RECOVERY	SETPOINT	ELECTRICAL	BASIS
WH-1	10 GAL	15 GPH @ 80° RISE	120°	3.0 KW	A.O. SMITH DEL-10
PRIOR TO SUBMITTAL OR PURCHASE, THE PLUMBING CONTRACTOR SHALL VERIFY THE APPROPRIATE ELECTRICAL CHARACTERISTICS OF THE SELECTED WATER HEATER. COORDINATE DIRECTLY WITH THE ELECTRICAL CONTRACTOR AND THE POWER PANEL SCHEDULES ON THE ELECTRICAL DRAWINGS.					

wright gardner architect llc

154 Krog Street, #125
Atlanta, GA 30307
404-218-8460

PROFICIENT ENGINEERING
6991 Peachtree Industrial Blvd Building 700
Peachtree Corners, Georgia 30092
404.330.9798
PROJECT # 118270

ARCADE CITY PARK PHASE 1 IMPROVEMENTS

ARCADE, GEORGIA

stamp:

GEORGIA REGISTERED No. 039968 PROFESSIONAL ENGINEER MIKE ROEDER

revisions

No.	Description	Date

sheet title:

DETAILS, SCHEDULES & W/V ISOMETRIC

project number: 17-053
drawing date: 02.06.2019
scale: as noted

sheet number:

P0-02

☐ NOT ISSUED FOR CONSTRUCTION
■ ISSUED FOR CONSTRUCTION

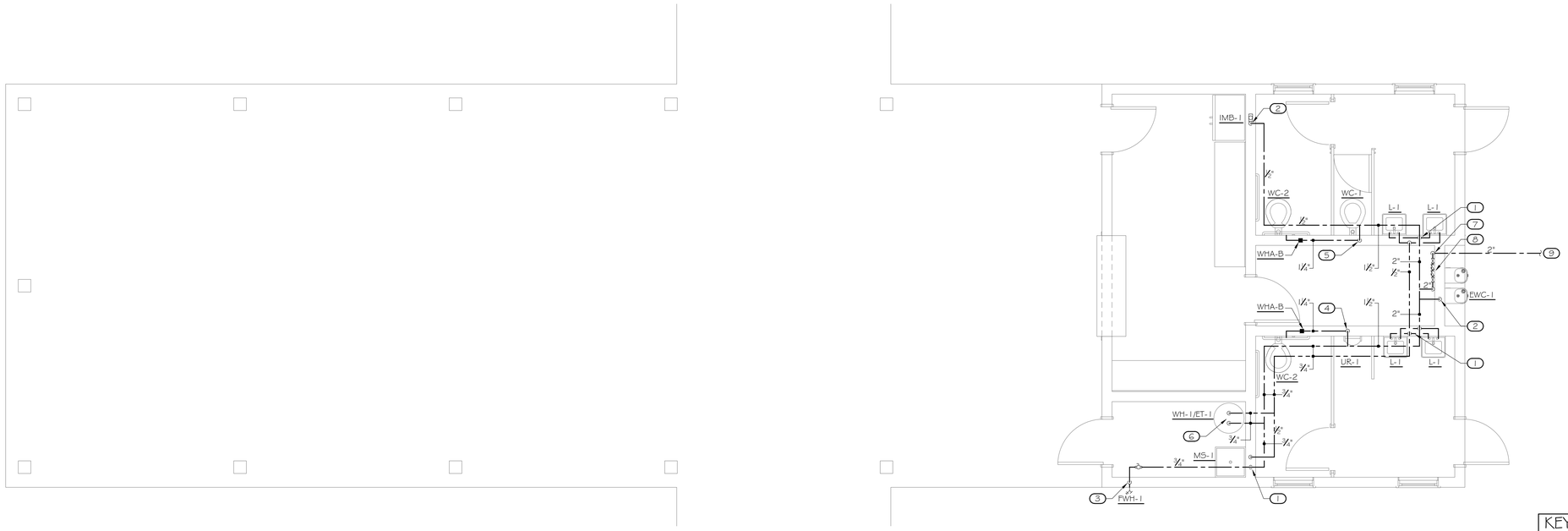

2 FLOOR PLAN - WATER

1/4" = 1'-0"

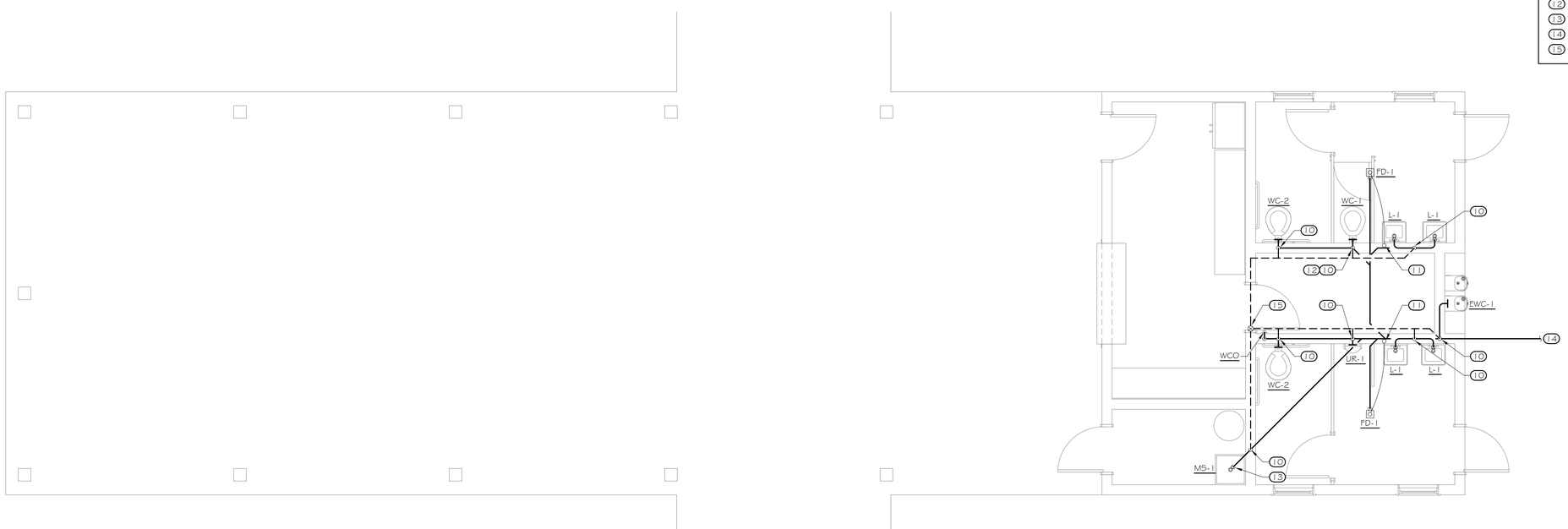

1 FLOOR PLAN - WASTE & VENT

1/4" = 1'-0"

KEYNOTES

1. ½" CW & ½" HW DN
2. ½" CW DN
3. ¾" CW DN
4. 1¼" CW DN
5. 1½" CW DN
6. ¾" CW & ¾" HW TO STAND MOUNTED WATER HEATER, SEE DETAIL
7. 2" DOMESTIC WATER SERVICE UP WITH SHUTOFF VALVE & PRESSURE GAUGE. PROVIDE PRESSURE REDUCING VALVE IF INCOMING PRESSURE EXCEEDS 80PSI.
8. 2" CW TO BACKFLOW PREVENTER BFP-1, MOUNTED AT AN ACCESSIBLE LOCATION
9. 2" DOMESTIC WATER SERVICE B/G, SEE CIVIL DWG FOR CONT
10. 2" V DN
11. TRAP PRIMER TP-L WITH ½" TP LINE B/F TO FD
12. 4" S DN
13. DISCHARGE WATER HEATER PAN DRAIN TO MOP SINK WITH AIR GAP
14. 4" S B/G, SEE CIVIL DWG FOR CONT
15. 3" V UP TO 3" VTR

wright gardner architect llc

154 Krog Street, #125
Atlanta, GA 30307
404-218-8460

PROFICIENT ENGINEERING
6991 Peachtree Industrial Blvd Building 700
Peachtree Corners, Georgia 30092
404.330.9798
PROJECT # 118270

ARCADE CITY PARK PHASE 1 IMPROVEMENTS

ARCADE, GEORGIA

stamp:

GEORGIA REGISTERED No. 039968 PROFESSIONAL ENGINEER MIKE ROEDER

revisions

No.	Description	Date

sheet title:

FLOOR PLANS

project number: 17-053
drawing date: 02.06.2019
scale: as noted

sheet number:

P1-01

☐ NOT ISSUED FOR CONSTRUCTION
■ ISSUED FOR CONSTRUCTION

SPECIFICATIONS

APPLICABLE CODES:

INTERNATIONAL FIRE CODE (IFC), 2012 EDITION
2014 IFC GA AMENDMENTS
INTERNATIONAL PLUMBING CODE (IPC), 2012 EDITION
2014 & 2015 IPC GA AMENDMENTS
INTERNATIONAL MECHANICAL CODE (IMC), 2012 EDITION
2014 & 2015 IMC GA AMENDMENTS
INTERNATIONAL FUEL GAS CODE (IFGC), 2012 EDITION
2014 & 2015 IFGC GA AMENDMENTS
INTERNATIONAL ENERGY CONSERVATION CODE (IECC), 2009 EDITION
2011 SUPPLEMENTS AND AMENDMENTS
2012 SUPPLEMENTS AND AMENDMENTS

SHOP DRAWINGS:

SUBMIT SHOP DRAWINGS FOR REVIEW. PDF FILES PREFERRED. SHOP DRAWINGS SHALL BE BOUND INTO VOLUMES (FILES), WITH EACH VOLUME (FILE) CONTAINING ONE COPY OF ALL SHOP DRAWINGS. ALL SHOP DRAWINGS SHALL BE SUBMITTED SIMULTANEOUSLY; NO SHOP DRAWINGS WILL BE CHECKED UNTIL ALL HAVE BEEN SUBMITTED.

SUBMITTALS SHALL BE SUPPORTED BY DESCRIPTIVE MATERIAL, SUCH AS CATALOG CUTS, DIAGRAMS, PERFORMANCE CURVES AND CHARTS PUBLISHED BY THE MANUFACTURER, TO SHOW CONFORMANCE TO SPECIFICATION AND DRAWING REQUIREMENTS; MODEL NUMBERS ALONE WILL NOT BE ACCEPTABLE. ALL LITERATURE SHALL CLEARLY INDICATE THE SPECIFIED MODEL NUMBER, DIMENSIONS, ARRANGEMENT, RATING AND CHARACTERISTICS OF THE PROPOSED EQUIPMENT. CAPACITIES AND RATINGS SHALL BE BASED ON CONDITIONS INDICATED OR SPECIFIED HEREIN. ANY DEVIATIONS FROM SPECIFIED EQUIPMENT (PARTICULARLY THOSE WHICH REQUIRE COORDINATION WITH OTHER TRADES) SHALL BE CLEARLY NOTED IN A CONCISE LIST ON A SEPARATE SHEET.

TEST AND BALANCE:

THE CONTRACTOR SHALL RETAIN THE SERVICES OF AN INDEPENDENT TEST AND BALANCE AGENCY THAT IS INDEPENDENT OF ANY CONTRACTOR, SUB-CONTRACTOR, OR MANUFACTURER TO PERFORM THE TESTING AND BALANCING AND PREPARE REPORTS TO THE GENERAL CONTRACTOR. THE INDEPENDENT TEST AND BALANCE AGENCY SHALL HAVE A CERTIFIED MEMBER OF THE NATIONAL ENVIRONMENTAL BALANCING BUREAU (NEBB).

TEST AND BALANCE SHALL ALSO PROVIDE QUOTE TO PERFORM BALANCING FOR COMFORT SIX MONTHS AFTER THE SPACE IS OCCUPIED.

P-TAB.COM OR EQUIVALENT.

GUARANTEE:

GUARANTEE THAT EACH PIECE OF APPARATUS SHALL BE OF THE CUSTOMARY STANDARD AND QUALITY FURNISHED BY THE DESIGNED MANUFACTURER FOR THAT CATALOG NUMBER.

GUARANTEE THAT THE AIR SYSTEMS SHALL OPERATE WITHOUT AERODYNAMIC NOISE GENERATED FROM THE FAULTY INSTALLATION OF DUCT WORK OR ANY COMPONENT OF THE AIR DISTRIBUTION SYSTEM.

GUARANTEE THAT ALL SYSTEMS AND COMPONENTS SHALL BE PROVIDED WITH A ONE YEAR WARRANTY FROM THE TIME OF DATE OF SUBSTANTIAL COMPLETION. THE WARRANTY SHALL COVER ALL MATERIALS AND WORKMANSHIP. DURING THIS WARRANTY PERIOD, ALL DEFECTS IN MATERIALS AND WORKMANSHIP SHALL BE CORRECTED BY REPAIR OR REPLACEMENT WITHOUT INCURRING ADDITIONS TO THE CONTRACT.

GENERAL NOTES:

REFER TO ARCHITECTURAL REFLECTED CEILING PLANS FOR EXACT LOCATION OF ALL CEILING MOUNTED EQUIPMENT.

ALL DUCT DIMENSIONS INDICATED IN THESE DOCUMENTS ARE INSIDE-CLEAR DIMENSIONS.

PORTIONS OF DUCTWORK OR PIPING VISIBLE THROUGH GRILLES AND REGISTERS IN FINISHED AREAS SHALL BE PAINTED FLAT BLACK. PAINT BLACK BEHIND ALL GRILLES.

ALL WIRING IN THE CEILING PLENUM SHALL BE PLENUM RATED CABLE.

MOUNTING FRAME OF CEILING MOUNTED AIR DISTRIBUTION DEVICES SHALL BE COMPATIBLE WITH CEILING TYPE. REFER TO ARCHITECTURAL DRAWINGS FOR CEILING TYPE.

ALL FIRE SEPARATIONS MUST BE PROTECTED WHEN APPLICABLE.

PROVIDE NEW FILTERS (MERV 7 OR BETTER PER OWNER) FOR ALL APPLICABLE HVAC EQUIPMENT AT THE END OF CONSTRUCTION.

ALL MATERIAL IN PLENUM MUST MEET FIRE AND SMOKE SPREAD AS REQUIRED BY NFPA 90A.

ALL ROOF PENETRATIONS TO BE 12" APART AND AT LEAST 12" AWAY FROM CURBS, WALLS, AND DRAIN SUMPS TO PROVIDE ROOFING CONTRACTOR WITH SUFFICIENT ACCESS FOR FLASHING EACH ROOF PENETRATION.

SUBSTITUTIONS MUST BE APPROVED IN WRITING BY ARCHITECT PRIOR TO BID SUBMISSION.

CONTRACTOR SHALL REVIEW ALL CONTRACT DOCUMENTS AND SHALL BE FAMILIAR WITH THE SCOPE AND REQUIREMENTS OF THIS PROJECT. ANY DISCREPANCIES OR LACK OF CLARITY IN THE DOCUMENTS SHALL BE IDENTIFIED TO THE ARCHITECT OR ENGINEER PRIOR TO THE SUBMISSION OF PRICING BIDS. WITH A SUBMITTED BID, CONTRACTOR IS ACCEPTING THESE DOCUMENTS AS SUFFICIENT DEFINITION OF THE SCOPE OF WORK, AND ANY ADDITIONAL COSTS BASED ON UNCLARITY OF CONTRACT DOCUMENTS WILL NOT BE CONSIDERED.

THE CONTRACTOR SHALL REFERENCE THE FULL SET OF CONSTRUCTION DOCUMENTS DURING PRICING AND CONSTRUCTION FOR COORDINATION BETWEEN DISCIPLINES RELATIVE TO THE MECHANICAL SCOPE.

CEILING FAN:

CEILING MOUNTED EXHAUST FANS SHALL BE OF THE CENTRIFUGAL DIRECT DRIVE TYPE. THE FAN HOUSING SHALL BE CONSTRUCTED OF STEEL. THE PLASTIC DUCT COLLAR SHALL BE A TAPERED SLEEVE FOR EASE OF CONNECTION TO 3 IN AND 4 IN ROUND DUCTWORK AND SHALL INCLUDE A BACKDRAFT DAMPER. THE GRILLE SHALL BE CONSTRUCTED OF NON-YELLOWING HIGH STRENGTH POLYMER AND ATTACHED TO THE HOUSING WITH TORSION SPRINGS. THE WHEELS SHALL BE CONSTRUCTED OF HIGH STRENGTH POLYMER. THE ACCESS FOR WIRING SHALL BE EXTERNAL. THE MOTOR DISCONNECT SHALL BE INTERNAL AND OF THE PLUG IN TYPE.

ALL FANS SHALL BEAR THE AMCA CERTIFIED RATINGS SEALS FOR SOUND AND AIR PERFORMANCE AND SHALL BE U.L. LISTED.

SPECIFICATIONS

DUCTWORK AND ACCESSORIES:

INDUSTRY STANDARDS: COMPLY WITH SMACNA (SHEET METAL AND AIR CONDITIONING CONTRACTORS' NATIONAL ASSOCIATION) HVAC DUCT CONSTRUCTION STANDARDS, RECOMMENDATIONS FOR FABRICATION, GAUGES, CONSTRUCTION AND DETAILS, AND INSTALLATION PROCEDURES, EXCEPT AS OTHERWISE INDICATED.

COMPLY WITH ASHRAE (AMERICAN SOCIETY OF HEATING, REFRIGERATING AND AIR CONDITIONING ENGINEERS) FUNDAMENTALS HANDBOOK RECOMMENDATIONS, EXCEPT AS OTHERWISE INDICATED.

DUCTWORK METAL AND GAUGES: EXCEPT AS OTHERWISE INDICATED, FABRICATE DUCTWORK FROM GALVANIZED SHEET STEEL COMPLYING WITH ASTM A527, LOCKFORMING QUALITY, WITH ASTM A525 G90 ZINC COATING, MILL PHOSPHATIZED. GAUGES TO COMPLY WITH SMACNA STANDARDS.

DUCT SEALANT: NON-HARDENING, NON-MIGRATING MASTIC OR LIQUID ELASTIC SEALANT (TYPE APPLICABLE FOR THE FABRICATION/INSTALLATION DETAIL) AS COMPOUNDED AND RECOMMENDED BY THE MANUFACTURER SPECIFICALLY FOR SEALING JOINTS AND SEAMS IN DUCTWORK.

DUCTWORK SUPPORT MATERIALS: EXCEPT AS OTHERWISE INDICATED, PROVIDE UPPER ATTACHMENT, HANGERS OF GALVANIZED STEEL STRAPS, OR STEEL RODS AND LOWER ATTACHMENT FOR SUPPORT OF DUCTWORK. HANGING/SUPPORT SYSTEMS SHALL BE IN ACCORDANCE WITH SMACNA REQUIREMENTS.

EXPOSED DUCTWORK SHALL BE DOUBLE-WALL SPIRAL PIPE WITH PAINT GRIP UNLESS OTHERWISE NOTED OR SUBSTITUTION APPROVED BY OWNER.

VOLUNTARY ALTERNATE EXPOSED DUCTWORK SHALL BE SINGLE-WALL SPIRAL PIPE UNLESS OTHERWISE NOTED OR SUBSTITUTION APPROVED BY OWNER. ALL EXPOSED DUCTWORK SHALL BE LINED IN LIEU OF WRAPPED. DUCT LINER THERMAL RESISTANCE SHALL MEET THE MINIMUM VALUES SPECIFIED IN PARAGRAPH 'DUCT INSULATION' BELOW.

DUCT INSULATION:

R-5 SUPPLY, OUTSIDE AND RETURN AIR DUCT INSULATION IN UNCONDITIONED SPACES
R-8 SUPPLY AND RETURN AIR DUCT INSULATION OUTSIDE THE BUILDING
R-8 INSULATION BETWEEN DUCTS AND THE BUILDING EXTERIOR WHEN DUCTS ARE PART OF A BUILDING ASSEMBLY

WALL LOUVERS:

THE WALL LOUVER SHALL BE AMCA CERTIFIED. THE WALL LOUVER SHALL BE A STATIONARY, DRAINABLE BLADE TYPE. THE LOUVER SHALL INCORPORATE DRAIN GUTTERS IN THE HEAD MEMBER AND HORIZONTAL BLADES TO CHANNEL WATER TO THE JAMBS WHERE WATER IS FURTHER CHANNELED THROUGH VERTICAL DOWNSPOUTS AND OUT A SLOPED SILL.

THE FRAME AND BLADES SHALL BE CONSTRUCTED FROM HEAVY GAUGE, EXTRUDED, ALUMINUM. THE LOUVER SHALL BE OF MECHANICALLY FASTENED CONSTRUCTION.

REFER TO THE EQUIPMENT SCHEDULE FOR A FULL LISTING OF REQUIRED LOUVER ACCESSORIES.

ELECTRIC WALL HEATER:

ELECTRIC WALL HEATERS SHALL BE QMARK MODEL AWH OR EQUAL.

THE HEATER ASSEMBLY WHICH FITS INTO THE BACK BOX SHALL CONSIST OF A FAN PANEL UPON WHICH IS MOUNTED ALL OF THE OPERATIONAL PARTS OF THE HEATER.

THE HEATING ELEMENT SHALL BE OF NON-GLOWING DESIGN CONSISTING OF AN 80/20 NICKEL-CHROMIUM RESISTANCE WIRE ENCLOSED IN A STEEL SHEATH TO WHICH PLATE FINS ARE COPPER BRAZED. IT SHALL BE WARRANTED FOR 5 YEARS.

THE FAN SHALL BE FIVE-BLADED ALUMINUM. THE FAN MOTOR SHALL BE TOTAL ENCLOSED.

FAN CONTROL SHALL BE OF BI-METALLIC, SNAP-ACTION TYPE AND SHALL ACTIVATE FAN AFTER HEATING ELEMENT REACHES OPERATING TEMPERATURE. THE FAN SHALL CONTINUE TO OPERATE AFTER THE THERMOSTAT IS SATISFIED AND UNTIL THE HEATING ELEMENT IS COOL.

THE TAMPER-PROOF THERMOSTAT SHALL BE OF BI-METALLIC, SNAP-ACTION TYPE WITH ENCLOSED CONTACTS. IT SHALL BE COMPLETELY CONCEALED BEHIND THE FRONT COVER TO BECOME TAMPER PROOF.

A THERMAL CUTOUT SHALL BE BUILT INTO THE SYSTEM TO SHUT OFF THE HEATER IN THE EVENT OF OVERHEATING.

A DOUBLE-POLE SINGLE THROW DISCONNECT SWITCH SHALL BE MOUNTED ON THE BACK BOX FOR POSITIVE DISCONNECT OF POWER SUPPLY. IT WILL BE COMPLETELY CONCEALED BEHIND THE FRONT GRID PANEL.

WHERE SCHEDULED, NORMALLY OPEN 24-VOLT AND 120-VOLT LOW VOLTAGE HOLDING COIL RELAYS SHALL BE AVAILABLE TO CONTROL HEATERS IN CONJUNCTION WITH CENTRAL ENERGY CONTROL SYSTEMS. THE BUILT-IN THERMOSTAT CAN THEN BE USED AS ONE OF THE THERMOSTATS IN AN AUTOMATIC NIGHT SET BACK OPERATION.

THE BACK BOX SHALL BE DESIGNED FOR DUTY AS RECESSED ROUGH-IN BOX IN EITHER MASONRY OR FRAME INSTALLATIONS AND IS ALSO USED WITH THE SURFACE MOUNTING FRAME IN SURFACE MOUNTING INSTALLATIONS. THE BACK BOX SHALL BE 20-GAUGE GALVANIZED STEEL AND SHALL CONTAIN KNOCKOUTS THROUGH WHICH POWER LEADS ARE BROUGHT.

THE FRONT PANEL SHALL BE OF THE BAR GRILLE TYPE AND SHALL BE CONSTRUCTED OF 16-GAUGE COLD-ROLLED STEEL, WELDED INTO A UNIFORM GRILLE AND FINISHED IN BAKED ENAMEL TO DIRECT THE WARMED AIR TOWARD THE FLOOR. THE FRONT GRILLE SHALL BE SURROUNDED BY A DECORATIVE SATIN-FINISH ALUMINUM FRAME.

THE HEATER SHALL BE MADE OF A BACK BOX, A HEATER ASSEMBLY, AND A FRONT PANEL.

REFER TO EQUIPMENT SCHEDULE FOR BASIS OF DESIGN AND ACCEPTABLE ALTERNATES.

LEGEND

SYMBOLS	DESCRIPTION
X1 / X2	DIFFUSER, GRILLE, REGISTER OR LOUVER TAG X1 = TYPE, X2 = CFM
	POSITIVE PRESSURE (AIR GOES OUT) DIFFUSER OR REGISTER, 4-WAY AIR PATTERN (UNLESS OTHERWISE NOTED)
	NEGATIVE PRESSURE (AIR GOES IN) GRILLE
	POSITIVE PRESSURE AIRFLOW (TYP. SUPPLY)
	NEGATIVE PRESSURE AIRFLOW (TYP. RETURN/EXHAUST)
	FLEXIBLE DUCT
	MANUAL VOLUME DAMPER (MVD)
FD	VERTICAL (TYP. WALL) FIRE DAMPER
FSD	VERTICAL (TYP. WALL) COMBINATION FIRE/SMOKE DAMPER
FD	HORIZONTAL (TYP. FLOOR/CEILING) FIRE DAMPER
FSD	HORIZONTAL (TYP. FLOOR/CEILING) COMBINATION FIRE/SMOKE DAMPER
T	THERMOSTAT
H	HUMIDISTAT
S	REMOTE TEMPERATURE SENSOR
	INTERNALLY LINED DUCT
	DUCT UP
	DUCT UP
	DUCT DOWN
	SUPPLY DUCT
UNIT / #	EQUIPMENT TYPE EQUIPMENT NUMBER. WHERE A LETTER IS USED, THERE ARE MULTIPLE INSTANCES.

ABBREVIATIONS

AFF	ABOVE FINISHED FLOOR	MA	MAKE-UP AIR
AHU	AIR HANDLING UNIT	MAU	MAKE-UP AIR UNIT
CO2	CARBON DIOXIDE	MAV	MANUAL AIR VENT
D	CONDENSATE DRAIN	MBH	1,000 BTU PER HR
DB	DRY BULB	MFCU	MINI FAN COIL UNIT
EA	EXHAUST AIR	MHP	MINI HEAT PUMP
EAT	ENTERING AIR TEMPERATURE	MVD	MANUAL VOLUME DAMPER
EDH	ELECTRIC DUCT HEATER	NC	NORMALLY CLOSED
EF	EXHAUST FAN	NO	NORMALLY OPEN
ESP	EXTERNAL STATIC PRESSURE	OA	OUTSIDE AIR
EWH	ELECTRIC WALL HEATER	OBD	OPPOSED BLADE DAMPER
F	DEGREES FAHRENHEIT	PIU	POWER INDUCTION UNIT
FCU	FAN COIL UNIT	RA	RETURN AIR
FD	FIRE DAMPER	RH	RELIEF HOOD
FSD	COMBINATION FIRE/SMOKE DAMPER	RTU	ROOFTOP UNIT
H	HUMIDISTAT	SA	SUPPLY AIR
IH	INTAKE HOOD	SP	STATIC PRESSURE
LAT	LEAVING AIR TEMPERATURE	UC	UNDER CUT DOOR
LWT	LEAVING WATER TEMPERATURE	VAV	VARIABLE AIR VOLUME
M	MOTOR	WB	WET BULB

DUCTWORK DETAILS

NO SCALE

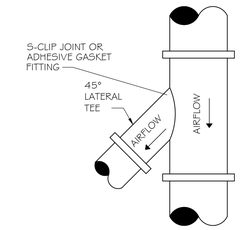

ROUND - ROUND

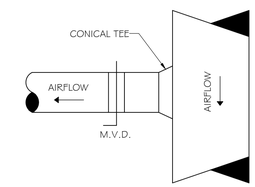

RECTANGULAR - ROUND

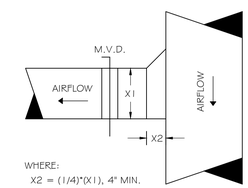

WHERE:
X2 = (1/4)*(X1), 4" MIN.

RECTANGULAR - RECTANGULAR

wright gardner architect llc

154 Krog Street, #125
Atlanta, GA 30307
404-218-8460

PROFICIENT ENGINEERING
6991 Peachtree Industrial Blvd Building 700
Peachtree Corners, Georgia 30092
404.330.9798
PROJECT # 118270

ARCADE CITY PARK
PHASE 1 IMPROVEMENTS

ARCADE, GEORGIA

stamp:

GEORGIA REGISTERED No. 034608 PROFESSIONAL ENGINEER JENNIFER LYNN DUCHAC

revisions

No.	Description	Date

sheet title:

GENERAL

project number: 17-053
drawing date: 02.06.2019
scale: as noted

sheet number:

M0-01

☐ NOT ISSUED FOR CONSTRUCTION
■ ISSUED FOR CONSTRUCTION

ELECTRIC WALL HEATER

MARK	CFM	WATTS	HEAT (BTU/H)	BASIS OF DESIGN	REMARKS 1	2	3	4	5
EWH-A	100	1500	5120	QMARK AWH	X	X	X	X	X

REMARKS:

1. PROVIDE WITH INTEGRAL THERMOSTAT AT UNIT TO MAINTAIN MINIMUM 45 F (ADJUSTABLE).
2. COORDINATE ELECTRICAL CHARACTERISTICS WITH ELECTRICAL CONTRACTOR.
3. FAN DELAY SWITCH.
4. THERMAL CUTOUT.
5. FACTORY DISCONNECT SWITCH.

FAN SCHEDULE

MARK	DUTY	TYPE	CFM	E.S.P. (IN WG)	MOTOR (W / hp)	DRIVE	MAX. NOISE (SONES)	CONTROL BY	BASIS OF DESIGN MODEL	REMARKS 1	2	3	4	5	6
EF-A	EXHAUST	CEILING CABINET	140	0.5	150	DIRECT	3.5	SWITCHED WITH LIGHTS	GREENHECK SP	X	X	X			
EF-1	EXHAUST	CEILING CABINET	70	0.5	100	DIRECT	2.0	WALL SWITCH	GREENHECK SP	X	X	X			

NOTES (APPLY TO ALL):

A. SEE ELECTRICAL PLANS FOR POWER CHARACTERISTICS
B. DESIGN IS BASED ON PRODUCTS BY GREENHECK. ACCEPTABLE ALTERNATES SHALL BE BY LOREN-COOK, TWIN-CITY, PENN BARRY.

REMARKS (APPLY AS SCHEDULED):

1. FAN SPEED CONTROLLER.
2. FACTORY DISCONNECT SWITCH/PLUG.
3. GRAVITY BACKDRAFT DAMPER.

LOUVERS

SYMBOL	MODEL/ SERIES	SERVES	SIZE WxH (IN)	MIN FREE AREA (SQ FT)	CFM	MAX PRESS. DROP (IN WG)	OPERATOR	INTERLOCK	FRAME	REMARKS 1	2	3	4	5
WL-A	ESD-635	RESTROOM MAKE UP AIR	12x12	0.2	140	0.1	N/A	N/A	ALUMINUM	X	X	X		

NOTES (APPLY TO ALL):

A. FINAL COLOR SELECTION SHALL BE MADE BY ARCHITECT AT TIME OF SHOP DRAWING APPROVAL. PROVIDE COLOR/FINISH CHARTS AS PART OF SUBMITTAL.
B. DESIGN IS BASED ON PRODUCTS BY GREENHECK. ACCEPTABLE ALTERNATES SHALL BE BY UNITED ENERTECH, ARROW, RUSKIN.

REMARKS (APPLY AS SCHEDULED):

1. BIRD SCREEN
2. BAKED ON ENAMEL FINISH.
3. GRAVITY BACKDRAFT DAMPER.

GENERAL NOTES

A. DRAWINGS ARE DIAGRAMMATIC ONLY; FINAL ROUTING OF DUCTWORK AND EQUIPMENT LOCATIONS SHALL BE DETERMINED IN THE FIELD. ADDITIONAL OFFSETS, ELBOWS, ETC. SHALL BE PROVIDED AND INSTALLED WITHOUT ADDITIONAL COST TO THE OWNER.

KEYNOTES

(1) EXHAUST DUCT TO EXTERIOR ROOF CAP WITH INSECT SCREEN.

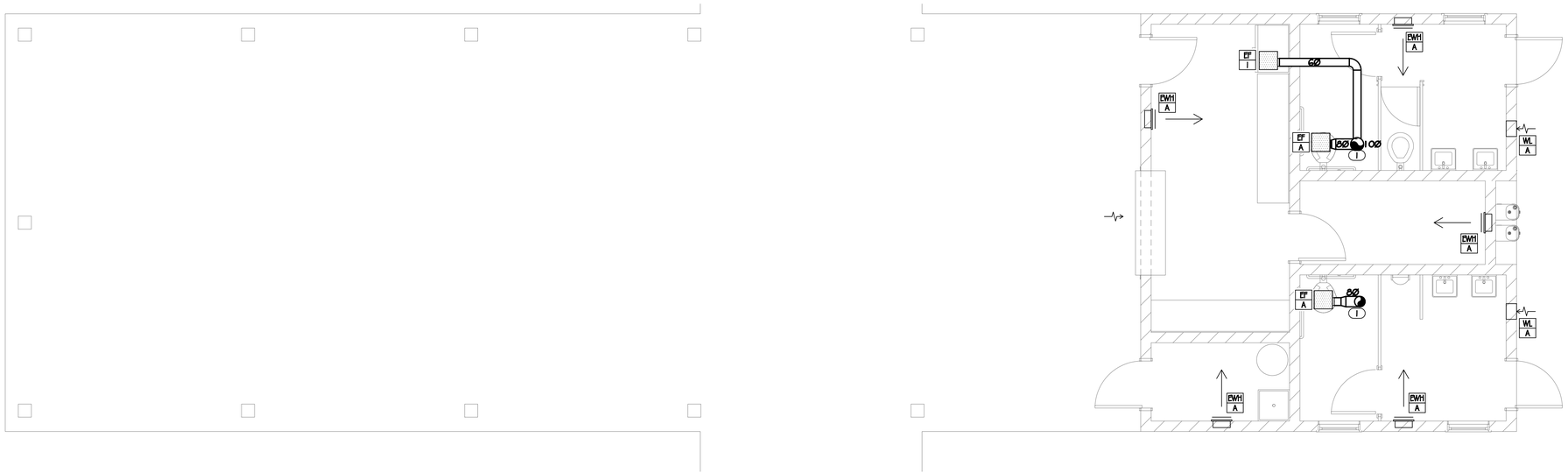

1 FLOOR PLAN
1/4" = 1'-0"

wright gardner architect llc
154 Krog Street, #125
Atlanta, GA 30307
404-218-8460

PROFICIENT ENGINEERING
6991 Peachtree Industrial Blvd Building 700
Peachtree Corners, Georgia 30092
404.330.9798
PROJECT # 118270

ARCADE CITY PARK
PHASE 1 IMPROVEMENTS
ARCADE, GEORGIA

stamp:

GEORGIA REGISTERED No. 034608 PROFESSIONAL ENGINEER JENNIFER LYNN DUCHAC

revisions

No.	Description	Date

sheet title:

FLOOR PLAN

project number: 17-053
drawing date: 02.06.2019
scale: as noted

sheet number:

M1-01

☐ NOT ISSUED FOR CONSTRUCTION
■ ISSUED FOR CONSTRUCTION

SPECIFICATIONS

GENERAL

CONTRACTOR SHALL REFER TO ALL RELATED DOCUMENTS, ARCHITECTURAL, STRUCTURAL, CIVIL AND MEP DRAWINGS, AND FULLY UNDERSTAND THE SCOPE OF WORK AND CONDITION OF CONSTRUCTION.

THE WORK UNDER THIS SPECIFICATIONS AND DRAWINGS SHALL INCLUDE ALL LABOR.

ALL INSTALLATION OF DEVICES AND CONNECTION OF CONDUCTORS SHALL BE PERFORMED BY LICENSED AND SKILLED ELECTRICIAN OR JOURNEYMAN.

ALL WORK SHALL BE COMPLETED TO THE SATISFACTION OF THE OWNER. IF ANY PORTION OF THE WORK IS FOUND UNSATISFACTORY BY THE OWNER, IT SHALL BE REMOVED AND REINSTALLED WITHOUT DELAY AT NO COST TO THE OWNER.

THE WORK INCLUDES, BUT NOT LIMITED TO:
- THE COMPLETE ELECTRICAL DISTRIBUTION SYSTEM.
- ROUGH-IN AND FINAL CONNECTIONS TO ALL DEVICES REQUIRING ELECTRICAL POWER, INCLUDING OWNER PROVIDED EQUIPMENT.
- LIGHTING CONTROL
- LIGHTING FIXTURES

EACH CONTRACTOR SHALL OBTAIN ALL PERMITS AND INSPECTIONS REQUIRED BY THE REGULATORY AUTHORITIES. ALL FEES RELATED TO OBTAINING PERMITS AND INSPECTION SHALL BE PAID FOR BY EACH CONTRACTOR IN HIS TRADE.

ALL MATERIALS AND WORKMANSHIP SHALL COMPLY WITH LOCAL, COUNTY, STATE, AND NATIONAL ELECTRICAL CODE 2017, SPECIFICATIONS, UTILITY COMPANY REQUIREMENTS AND ALL INDUSTRY STANDARDS.

ANY DIFFERENCES IN ABOVE MENTIONED REQUIREMENTS, THE MOST STERN SHALL OVERRULE ALL OTHERS.

IN ADDITION TO ABOVE MENTIONED CODES AND SPECIFICATIONS, THE FOLLOWING INDUSTRY STANDARDS SHALL BE COMPLIED IF THEY ARE MORE STRINGENT.
- IEEE
- IES
- IECC 2009
- ASHRAE 90.1
- NFPA
- NEMA
- UL
- ADA

THE MANUFACTURER'S PUBLISHED DIRECTIONS SHALL BE FOLLOWED IN THE DELIVERY, STORAGE, PROTECTION, INSTALLATION AND WIRING OF ALL EQUIPMENT AND MATERIAL.

THE DRAWINGS SHOW DIAGRAMMATICALLY THE LOCATIONS OF THE VARIOUS LINES, CONDUITS, FIXTURES, AND EQUIPMENT AND THE METHOD OF CONNECTING AND CONTROLLING THEM. IT IS NOT INTENDED TO SHOW EVERY CONNECTION IN DETAIL AND ALL FITTINGS REQUIRED FOR A COMPLETE SYSTEM. THE SYSTEMS SHALL INCLUDE BUT ARE NOT LIMITED TO THE ITEMS SHOWN ON THE DRAWINGS. EXACT LOCATIONS OF THESE ITEMS SHALL BE DETERMINED BY REFERENCE TO THE GENERAL PLANS AND MEASUREMENTS AT THE BUILDING AND IN COOPERATION WITH THE OTHER SUBCONTRACTORS, AND IN ALL CASES, SHALL BE SUBJECT TO THE APPROVAL OF THE OWNER. THE OWNER RESERVES THE RIGHT TO MAKE ANY REASONABLE CHANGE IN THE LOCATION OF ANY PART OF THIS WORK WITHOUT ADDITIONAL COST TO THE OWNER.

CONTRACTOR SHALL SEEK APPROVAL FROM THE OWNER FOR ANY CHANGES TO THE SPECIFICATIONS OR CONTRACT DOCUMENTS.

ANY EXCEPTIONS, INCONSISTENCIES AND CONFLICTS IN CONTRACT DOCUMENTS, SPECIFICATIONS AND CONTRACT DOCUMENTS BY OTHER TRADE SHALL BE BROUGHT TO ATTENTION TO THE OWNER PRIOR TO BID.

CONTRACTOR SHALL COORDINATE AND VERIFY THE WORK WITH EXISTING CONDITIONS AND THE WORK OF OTHER TRADE PRIOR TO ANY FABRICATIONS OR INSTALLATION. IF THE LAYOUT OF THE DEVICES ON DRAWINGS ARE IMPRACTICAL TO THE CONDITION IN FIELD, CONTRACTOR SHALL NOTIFY THE OWNER IMMEDIATELY PRIOR TO ANY FABRICATION OR INSTALLATION.

ELECTRICAL DEVICES ARE INDICATED ON DRAWINGS AT APPROXIMATE LOCATIONS. THE OWNER RESERVE THE RIGHT TO MAKE REASONABLE CHANGES IN LOCATIONS WITHOUT ADDITIONAL COSTS.

THE LINES INDICATING BRANCH CIRCUITS DO NOT REPRESENT THE ROUTING OF ELECTRICAL CONDUITS. THEY INDICATE THE LAYOUT AND CONTROL OF CIRCUITS.

PRODUCTS AND WORK

MATERIALS FURNISHED SHALL BE NEW AND BY STANDARD MANUFACTURERS AND MUST CONFORM TO THE NATIONAL BOARD OF FIRE UNDERWRITER'S REQUIREMENTS AND BEAR THE UNDERWRITER'S LABORATORIES' SEAL OF APPROVAL.

LISTED MANUFACTURERS, MODELS, OR CATALOGUE NUMBERS IN PART OR ALL SHALL ENTAIL TO INCLUDE THE PUBLISHED MANUFACTURER'S DESCRIPTION AND SPECIFICATION.

CONTRACTOR SHALL NOT INTERPRET THAT THE LISTED MANUFACTURERS IN SPECIFICATIONS OR DRAWINGS TO EXCLUDE ALL OTHER MANUFACTURERS

CONTRACTOR SHALL MAKE CERTAIN THAT ALL EQUIPMENT FIT IN THE SPACE DESIGNATED AND DESIGNED FOR THE SURROUNDINGS IT OCCUPIES.

COMPLETE CATALOGUE ILLUSTRATION AND DESCRIPTIONS OF ALL EQUIPMENT SHALL BE SUBMITTED TO THE OWNER PRIOR TO ORDERING ANY EQUIPMENT.

ALL HORIZONTAL RUNS OF CONDUITS SHALL BE SUPPORTED BY MEANS OF APPROVED HANGER FROM THE STRUCTURAL CEILING.

COORDINATE THE WORK UNDER THIS SECTION WITH ALL OTHER TRADES.

CONDUITS AND RACEWAYS:

MANUFACTURERS: SQUARE D, B-LINE, ALLIED TUBE & CONDUIT, HOFFMAN, CARLON ELECTRICAL, WIREMOLD.

OUTDOORS EXPOSED: RIGID STEEL.
OUTDOORS CONCEALED ABOVE GROUND: RIGID STEEL.
OUTDOORS UNDERGROUND: TYPE EPC-40-PVC
OUTDOORS CONNECTION TO VIBRATING EQUIPMENT (INCLUDING TRANSFORMERS AND MOTOR DRIVEN EQUIPMENT): LFMC.
BOXES AND ENCLOSURES ABOVE GROUND: NEMA 3R UNLESS NOTED OTHERWISE ON PLANS.
INDOORS EXPOSED NOT SUBJECT TO PHYSICAL DAMAGE: EMT.
INDOORS EXPOSED NOT SUBJECT TO SEVERE PHYSICAL DAMAGE: EMT.
INDOORS EXPOSED SUBJECT TO SEVERE PHYSICAL DAMAGE: RIGID STEEL CONDUIT.
INDOORS CONCEALED IN CEILINGS AND INTERIOR WALLS AND PARTITIONS: EMT.
INDOORS CONNECTION TO VIBRATING EQUIPMENT: FMC, EXCEPT USE LFMC IN DAMP OR WET LOCATIONS.
INDOORS DAMP OR WET LOCATIONS: IMC.
INDOORS LOW-VOLTAGE CABLES: EMT.

SPECIFICATIONS

CONDUCTORS:

COPPER CONDUCTORS #10 AND SMALLER:

LABELED PER UL 83, TYPE THHN/THWN, SOLID COPPER 600 VOLT INSULATION, UNIFORM COLOR CODED JACKET WITH JACKET DATA.
METAL CLAD (TYPE MC) CABLE WHERE INSTALLED IN ACCORDANCE WITH NEC ARTICLE 330.

COPPER CONDUCTORS #8 OR LARGER:

LABELED PER UL 83, TYPE THHN/THWN, STRANDED COPPER, 600VOLT INSULATION, UNIFORM COLOR CODED JACKET WITH JACKET DATA.

ACCEPTABLE MANUFACTURERS OF CONDUCTORS:
- PIRELLIE
- SOUTHWIRE
- AETNA
- REPUBLIC
- AFC
- ENCORE WIRE
- KERITE

CONTRACTOR MAY USE ALUMINUM CONDUCTORS FOR #4 AWG OR LARGER IN THE PLACE OF COPPER CONDUCTORS. CONTRACTOR SHALL REFER TO NEC TABLE 310-16 FOR EQUIVALENT AMPACITY AND SHALL COMPENSATE FOR VOLTAGE DROP.

MOLDED CASE CIRCUIT BREAKER:

INCLUDE SCHEDULE OF ALL FUSES, RATINGS, TIME COORDINATION DATA, MANUFACTURER'S STANDARD DATA AND TIME-CURRENT CURVES. ALL DATA SHALL BE BASED ON TEST OF STANDARD PRODUCTS.

APPROVED MANUFACTURERS:
- GENERAL ELECTRIC
- CUTLER HAMMER
- SQUARE D
- SIEMENS

THERMAL-MAGNETIC BOLT-IN TYPE CIRCUIT BREAKERS WITH QUICK-MAKE, QUICK-BREAK CONTACTS; TRIP-FREE OPERATION WITH OVER-THE-CENTER TOGGLE HANDLE OR NON-REMOVABLE MONOLITHIC TIE-HANDLE.

MULTI-POLE BREAKERS SHALL HAVE INTERNAL COMMON TRIP AND COMMON RESET WITH A SINGLE TOGGLE HANDLE OR NON-REMOVABLE MONOLITHIC TIE-HANDLE.

TRIP RATINGS SHALL BE MOLDED ON THE HANDLE OR FACE OF BREAKER.

BREAKER TERMINALS SHALL BE RATED TO ACCOMMODATE A MINIMUM OF 75 DEGREE C. CONDUCTORS.

BREAKER SHALL BE RATED FOR MOUNTING AND OPERATION IN ANY POSITION; SHALL ACCOMMODATE AND MATCH THE TYPE OF TERMINATIONS REQUIRED.

SINGLE POLE BREAKERS RATED 15 AND 20 AMPERES SHALL BE UL LABELED AS "SWITCHING BREAKERS" AT THE APPLIED CIRCUIT VOLTAGE.

MULTI-POLE BREAKERS RATED 100 AMPERES AND LARGER SHALL BE MOLDED CASE THERMAL-MAGNETIC BOLT-IN TYPE BREAKER WITH ADJUSTABLE INSTANTANEOUS TRIP.

LIGHTING FIXTURE

SUBMITTAL:

SCHEDULE BY TYPE DESIGNATION ALL LIGHTING FIXTURES, EACH COMPLETE WITH DATA SHEET WITH COMPLETE PHYSICAL, ELECTRICAL AND LIGHTING CHARACTERISTICS, LAMP TYPE AND LAMP DATA.

REFER TO THE "LIGHTING FIXTURE SCHEDULE" IN THE DRAWINGS FOR INDIVIDUAL FIXTURE DESCRIPTIONS AND MANUFACTURER TYPES.

PROVIDE LAMPS FOR EACH FIXTURE OF QUANTITY, TYPE AND COLOR AS LISTED IN LIGHTING FIXTURE SCHEDULE. GE, SYLVANIA OR PHILIPS ARE ACCEPTABLE.

EACH LIGHTING FIXTURE SHALL BE UL LABELED FOR PROPER OPERATION IN THE TYPE OF CEILING CONSTRUCTION AND FOR THE MOUNTING ARRANGEMENT ON/IN WHICH IT IS INSTALLED.

FIELD VERIFY ACTUAL CEILING SLOPE FOR FIXTURES INSTALLED IN SAME AND ACTUAL FIELD DIMENSIONS AND ANGLES OF CONSTRUCTION FOR ANY FIXTURE CONFORMING THE SHAPE AND LENGTH OF SAME, FOR COORDINATION OF FIXTURE CONSTRUCTION.

PANELBOARD

SUBMITTAL:

INCLUDE SCHEDULE OF EACH PANELBOARD WITH ALL DEVICES AND COMPLETE WITH PHYSICAL AND ELECTRICAL DATA AND WITH RATINGS FOR EACH COMPONENT INCLUDING BREAKER/FUSE OVERLAY CURVES.

LABELED PER UL #67 AND #50, CONFORM WITH NEMA #250 AND PB1, NFPA #70-384 AND 70-373.

ALL JUNCTION BOXES SHALL BE LABELED WITH PANEL AND CIRCUIT DESIGNATION.

PROVIDE TYPED CIRCUIT DIRECTORY WITH EACH CIRCUIT SERVING DEVICES AND AREA ITS SERVING.

APPROVED MANUFACTURERS:
- GENERAL ELECTRIC
- CUTLER HAMMER
- SQUARE D
- SIEMENS

LIGHTING CONTROL

TIME SWITCHES:

SOLID STATE, PROGRAMMABLE, WITH ALPHANUMERIC DISPLAY; COMPLYING WITH UL 917. 20-A BALLAST LOAD, 120/240VAC.

TWO ON-OFF SET POINTS ON A 24-HOUR SCHEDULE AND ANNUAL HOLIDAY SCHDULE THAT OVERRIDES THE WEEKLY OPERATION ON HOLIDAYS.

ALLOW CONNECTION OF A PHOTOELECTRIC RELAY AS SUBSTITUTE FOR ON-OFF FUNCTION OF A PROGRAM

BATTERY BACKUP FOR NOT LESS THAN SEVEN DAYS RESERVE TO MAINTAIN SCHEDULES AND TIME CLOCK.

INDOOR OCCUPANCY SENSORS:

WALL OR CEILING MOUNTED SOLID-STATE INDOOR OCCUPANCY SENSORS WITH A SEPARATE POWER PACK

ADJUSTABLE TIME-DELAY OVER A RANGE OF 1 TO 30 MINUTES.

SENSOR OUTPUT: CONTACTS RATED TO OPERATE THE CONNECTED RELAY, COMPLYING WITH UL773A. SENSOR IS POWERED FROM POWER PACK.

POWER PACK: DRY CONTACTS RATED FOR 20-A BALLAST LOAD AT 120 OR 277 VAC. AUTOMATIC LIGHT-LEVEL SENSOR: ADJUSTABLE FROM 2 TO 200 FC (21.5 TO 2152 LUX); TURN LIGHTS OFF WHEN SELECTED LIGHTING LEVEL IS PRESENT.

DUAL SENSOR TYPE: DETECT OCCUPANCY AREA USING PIR (PASSIVE INFRA-RED) AND ULTRASONIC DETECTION METHOD.

SPECIFICATIONS

GROUNDING AND BONDING

ALL GROUNDING AND BONDING SHALL CONFORM TO NEC ARTICLE 250.

COPPER WIRE OR CABLE INSULATED FOR 600V UNLESS REQUIRED BY APPLICABLE CODE OR AUTHORITIES HAVING JURISDICTION.

INSTALL SOLID CONDUCTOR FOR #8 AWG AND SMALLER AND STRANDED CONDUCTORS FOR #6 OR LARGER.

INSTALL INSULATED EQUIPMENT GROUNDING CONDUCTORS FOR ALL EQUIPMENT.

LOW VOLTAGE TRANSFORMERS

SUBMITTALS: PROVIDE PRODUCT DATA FOR EACH TRANSFORMER. INDICATE DIMENSIONS AND WEIGHTS.

PROVIDE CERTIFICATION THAT TRANSFORMERS, ACCESSORIES, AND COMPONENTS WILL WITHSTAND SEISMIC FORCES.

MANUFACTURERS: CUTLER-HAMMER, SIEMENS, GE AND SQUARE D.

INSULATION CLASS: 220 DEG C, UL COMPONENT RECOGNIZED INSULATION SYSTEM WITH MAXIMUM OF 150 DEG C RISE ABOVE 40 DEG C AMBIENT TEMPERATURE.

COMPLY WITH NEMA TP1, CLASS 1 EFFICIENCY LEVELS AND TESTED ACCORDING TO NEMA TP2.

TESTING AND INSPECTION: PERFORM VISUAL AND MECHANICAL INSPECTION AND ELECTRICAL TEST STATED IN NETA ACCEPTANCE TESTING SPECIFICATION. CERTIFY COMPLIANCE WITH TEST PARAMETERS.

PERFORM AN INFRARED SCAN OF TRANSFORMER CONNECTIONS TWO MONTHS AFTER SUBSTANTIAL COMPLETION, PLUS 2 FOLLOW UP SCANS. ONE AT 4 MONTHS AND THE OTHER AT 11 MONTHS. PROVIDE CERTIFIED REPORT.

GENERAL NOTES

ALL EXIT SIGNS, NIGHT LIGHTS AND EMERGENCY BALLAST CHARGING CIRCUITS SHALL BE CONNECTED TO UNSWITCHED PORTION OF LIGHTING CIRCUIT SHOWN.

FIXTURE TYPE INDICATED BY UPPER CASE CHARACTERS, SWITCHING AND GROUPING DESIGNATED BY LOWER CASE LETTER AND CIRCUIT BY NUMBER (WHERE APPLICABLE).

WHEN CONDUCTOR OR CONDUIT SIZE IS INDICATED FOR BRANCH CIRCUIT HOME RUN, THE CONDUCTOR AND CONDUIT SIZE INDICATED SHALL BE USED FOR THE COMPLETE CIRCUIT.

REFER TO THE ARCHITECTURAL/INTERIORS DOCUMENTS FOR ACTUAL DEVICE LOCATIONS AND DIMENSIONS.

REFER TO THE APPROPRIATE DRAWINGS FOR THE EXACT LOCATION OF EQUIPMENT INSTALLED UNDER OTHER DIVISIONS OF THE DOCUMENTS, WHICH REQUIRE ELECTRICAL SERVICE.

REFER TO APPROPRIATE DRAWINGS AND MANUFACTURER'S INSTALLATION MANUAL TO PROVIDE ALL SUPPLEMENTARY AND CONTROL CIRCUITS TO BRING EQUIPMENT TO FULL WORKING CONDITION.

EQUIPMENT GROUNDING CONDUCTORS SHALL BE INSTALLED IN ALL RACEWAYS.

WALL SWITCHES CONTROLLING CIRCUITS OF OPPOSITE PHASES SHALL NOT BE INSTALLED IN COMMON BOX UNLESS PERMANENT BARRIER IS PROVIDED.

ALL RACEWAY AND EQUIPMENT SUPPORTS AND HANGERS SHALL BE FULLY COORDINATED WITH STRUCTURAL DRAWINGS.

REFER TO THE ARCHITECTURAL/INTERIORS REFLECTED CEILING PLANS FOR EXACT FIXTURE PLACEMENT AND DIMENSIONS.

REFER TO THE ARCHITECTURAL/INTERIORS DOCUMENTS FOR ACTUAL DEVICE LOCATIONS AND DIMENSIONS. FIELD VERIFY LAYOUT WITH EXISTING CONDITIONS AND STRUCTURE PRIOR TO BEGINNING INSTALLATION.

SEE HVAC DRAWINGS FOR LOCATIONS OF EQUIPMENT TO BE POWERED.

COORDINATE WITH EQUIPMENT CUTSHEETS AND PROVIDE ADDITIONAL CONTROL CIRCUITS IF REQUIRED BY MANUFACTURER.

GENERAL DIAGRAMMATIC RACEWAY INTERCONNECTIONS OF EQUIPMENT, FIXTURES AND DEVICES ARE INDICATED ON FLOOR AND REFLECTED CEILING PLANS, REFER TO STRUCTURAL AND ARCHITECTURAL PLANS FOR ELEVATION CHANGES AND RACEWAY ROUTES.

PROVIDE SURGE PROTECTION FOR ELECTRICAL AND TELEPHONE SERVICES.

EACH PENETRATION OF A FIRE RESISTANT RATED ASSEMBLY BY A PIPE, TUBE WIRE OR CONDUIT SHALL BE PROTECTED BY A THROUGH PENETRATION FIRE STOP SYSTEM THAT HAS BEEN TESTED ACCORDING TO ASTM E814 OR E199.

ELECTRIC RECEPTACLES, SWITCHES, OUTLETS, ETC. SHALL NOT BE INSTALLED BACK TO BACK ON FIRE RESISTANCE RATED WALLS. THEY SHALL BE AT LEAST 24-INCHES APART.

LEGEND

SYMBOLS	DESCRIPTION	MOUNTING
	DUPLEX RECEPTACLE, 120V, 20A, NEMA 5-20R	18" AFF
	DUPLEX RECEPTACLE, 120V, 20A, NEMA 5-20R	42" AFF OR 6" ABOVE COUNTER TOP
	QUADRAPLEX RECEPTACLE, 120V, 20A, NEMA 5-20R	18" AFF
AC	QUADRAPLEX RECEPTACLE, 120V, 20A, NEMA 5-20R	42" AFF OR 6" ABOVE COUNTER TOP
	DUPLEX RECEPTACLE, 120V, 20A, NEMA 5-20R	FLUSH WITH FINISHED FLOOR
	DUPLEX RECEPTACLE, 120V, 20A, NEMA 5-20R	IN CEILING
	SPECIAL RECEPTACLE, CONFIGURATION AND ELECTRICAL CHARACTERISTIC AS NOTED ON DWG	18" AFF
J	JUNCTION BOX FLUSH IN WALL WITH COVER. SIZE PER NEC.	18" AFF
J	JUNCTION BOX FLUSH IN CEILING WITH COVER. SIZE PER NEC.	IN CEILING
J	JUNCTION BOX FLUSH IN FINSHED FLOOR WITH COVER. SIZE PER NEC.	FLUSH WITH FINISHED FLOOR
$	SWITCH	42" AFF
$3	SWITCH - 3 WAY	42" AFF
$OS	SWITCH - WALL MTD, INTEGRAL OCCUPANCY SENSOR	42" AFF
$LV	SWITCH - WALL MTD, LOW VOLTAGE, PILOT LIGHT	42" AFF
$D	SWITCH - WALL MTD, DIMMING	42" AFF
OS	SWITCH - CEILING MOUNTED OCCUPANCY SENSOR	IN CEILING
	TV OUTLET	18" AFF
	TELEPHONE OUTLET	18" AFF
	TELEPHONE OUTLET. SUBSCRIPT: F - FIREMAN'S PHONE, H - HOUSE PHONE, P - PAY PHONE	42" AFF OR 6" ABOVE COUNTER TOP
	TELEPHONE / DATA COMBINATION OUTLET	18" AFF
	TELEPHONE / DATA COMBINATION OUTLET	FLUSH WITH FINISHED FLOOR
	TELEPHONE / DATA COMBINATION OUTLET	42" AFF OR 6" ABOVE COUNTER TOP
	DATA OUTLET	18" AFF
	DATA OUTLET	42" AFF OR 6" ABOVE COUNTER TOP
J	DISCONNECT SWITCH. SUBSCRIPT: AMP / # OF POLES / ENCLOSURE	AS INDICATED ON DWG
J	FUSED DISCONNECT SWITCH. SUBSCRIPT: AMP / # OF POLES / ENCLOSURE / FUSE	AS INDICATED ON DWG
	ELECTRICAL PANELBOARD. REFER TO PANELBOARD SCHEDULE.	SURFACE MOUNTED ON WALL
	EQUIPMENT AS NOTED ON DRAWING.	SURFACE MOUNTED ON WALL
M	MOTOR	
XX-#	HOME RUN WITH WIRE TICKS. XX - PANEL DESIGNATION, # - CIRCUIT DESIGNATION. WIRE TICKS - (1) NEUTRAL, (3) HOT & (1) GROUND	
D	SMOKE DETECTOR. CEILING / WALL MOUNTED	CEILING / 80" AFF
H	HEAT DETECTOR. CEILING/WALL MOUNTED	CEILING / 80" AFF
	FIRE ALARM NOTIFICATION DEVICE. AUDIO AND VISUAL.	80" AFF
	FIRE ALARM NOTIFICATION DEVICE. AUDIO.	80" AFF
	FIRE ALARM NOTIFICATION DEVICE. VISUAL.	80" AFF
	FIRE ALARM INITIATION DEVICE. PULL STATION.	42" AFF

ABBREVIATIONS

AC	6" ABOVE COUNTER SPACE OR 42" AFF	IG	ISOLATED GROUND
AF	AMP FUSE	ISC	SHORT CIRCUIT CURRENT
AFF	ABOVE FINISHED FLOOR	LTG	LIGHTING
AL	ALUMINUM	MTD	MOUNTED
BFC	BELOW FINISHED CEILING	N	NEUTRAL
BKR	BREAKER	NL	NIGHT LIGHT
CND	CONDUIT	NEC	NATIONAL ELECTRICAL CODE
CONN	CONNECTED OR CONNECTION	PNL	PANEL
CTB	CABLE TV TERMINAL BACKBOARD	RECPT	RECEPTACLE
CU	COPPER	TEL	TELEPHONE
DN	DOWN	TTB	TELEPHONE TERMINAL BOARD
EC	EMPTY CONDUIT	TV	TELEVISION
ELEC	ELECTRICAL	TVSS	TRANSIENT VOLTAGE SURGE SUPPRESSOR
FACP	FIRE ALARM CONTROL PANEL	TYP	TYPICAL
FAA	FIRE ALARM ANNUNCIATOR PANEL	XFMR	TRANSFORMER
G OR GRND	GROUND	UG	UNDERGROUND
GFCI OR GF	GROUND FAULT CIRCUIT INTERRUPTER	WP	WEATHERPROOF

wright gardner architect llc

154 Krog Street, #125
Atlanta, GA 30307
404-218-8460

PROFICIENT ENGINEERING
6991 Peachtree Industrial Blvd Building 700
Peachtree Corners, Georgia 30092
404.330.9798
PROJECT # 118270

ARCADE CITY PARK
PHASE 1 IMPROVEMENTS

ARCADE, GEORGIA

stamp:

GEORGIA REGISTERED No. 032547 PROFESSIONAL ENGINEER BRIAN M. ARMENTA

revisions

No.	Description	Date

sheet title:

GENERAL

project number: 17-053
drawing date: 02.06.2019
scale: as noted

sheet number:

E0-01

☐ NOT ISSUED FOR CONSTRUCTION
■ ISSUED FOR CONSTRUCTION

Panel **A**

ROOM
MOUNTING FLUSH
FED FROM UTILITY
NOTE

VOLTS 208Y/120V 3P 4W
BUS AMPS 200
NEUTRAL 100%

AIC 22,000
MAIN BKR 200
LUGS STANDARD

CKT #	CKT BKR	LOAD KVA	CIRCUIT DESCRIPTION		CKT #	CKT BKR	LOAD KVA	CIRCUIT DESCRIPTION
1	20/2	1.5	EWH-A	a	2	20/2	1.5	EWH-A
3	|			b	4	|		
5	20/2	1.5	EWH-A	c	6	20/2	1.5	EWH-A
7	|			a	8	|		
9	20/2	3.0	WH-1	b	10	20/1	0.6	WATER COOLER
11	|			c	12	20/1	0.4	RECEPTACLE
13	20/1	0.4	RECEPTACLE	a	14	20/1	0.4	RECEPTACLE
15	20/1	0.4	RECEPTACLE	b	16	20/1	0.2	RECEPTACLE
17	20/1	0.2	RECEPTACLE	c	18	20/1	1.5	MICROWAVE
19	20/1	1.2	REFRIGERATOR	a	20	20/1	0.4	RECEPTACLE
21	20/1	0.1	EF-1	b	22	20/1	0.3	LIGHTING
23	20/1	0.4	RECEPTACLE	c	24	20/1	0.4	EF-A, LIGHTING
25	20/1	0.2	RECEPTACLE	a	26	20/1	0.2	RECEPTACLE
27	20/1	1.0	HAND DRYER	b	28	20/1	0.2	RECEPTACLE
29	20/1	1.0	HAND DRYER	c	30	20/1	0.2	RECEPTACLE
31	20/1	0.0	SPACE	a	32	20/1	0.2	RECEPTACLE
33	20/1	0.0	SPACE	b	34	20/1	0.0	SPACE
35	20/1	0.0	SPACE	c	36	20/1	0.0	SPACE
37	20/1	0.0	SPACE	a	38	20/1	0.0	SPACE
39	20/1	0.0	SPACE	b	40	20/1	0.0	SPACE
41	20/1	0.0	SPACE	c	42	20/1	0.0	SPACE

	CONN KVA	CALC KVA			CONN KVA	CALC KVA	
LIGHTING	0.5	0.7	(125%)	RECEPTACLES	3.4	3.4	(50%>10)
LARGEST MOTOR	1.0	0.3	(25%)	KITCHEN EQUIPMENT	1.2	1.2	(100%)
MOTORS	2.3	2.3	(100%)	NONCONTINUOUS	2.1	2.1	(100%)
				HEATING	9.0	9.0	(100%)
				TOTAL LOAD		18.9	
				BALANCED 3-PHASE AMPS		52.6	
				PHASE A		94.1%	
				PHASE B		92.4%	
				PHASE C		114%	

ONE-LINE DIAGRAM

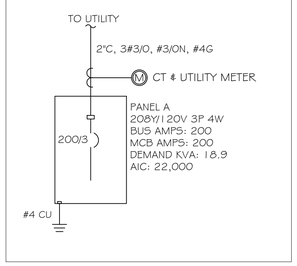

GROUNDING AND BONDING DETAIL

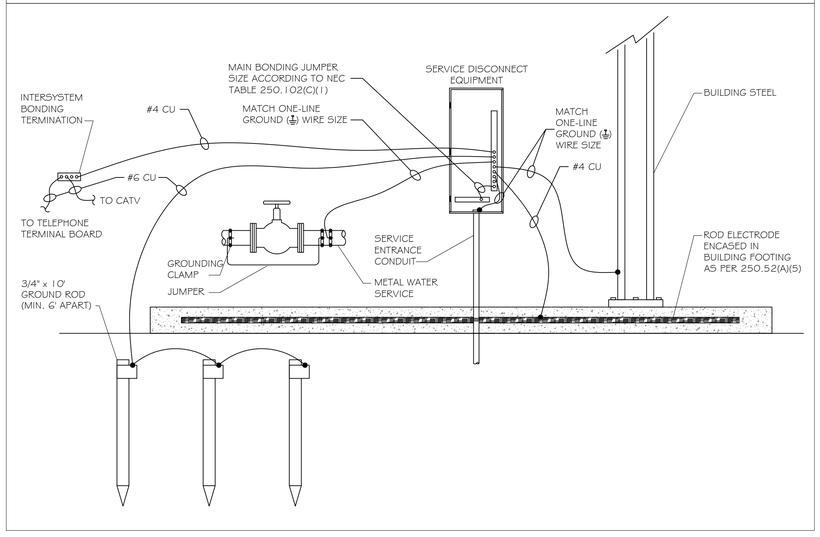

GENERAL SCHEDULE

CALLOUT	SYMBOL	VOLTS	KVA	CIRCUIT	WIRE CALLOUT	DISCONNECT DESCRIPTION
EF-1		120V 1P 2W	0.1	A-21	1/2"C,1#12,#12N,#12G	CONTROLLED BY SWITCH
EF-A		120V 1P 2W	0.1	A-24	1/2"C,1#12,#12N,#12G	SWITCHED WITH LIGHTS
EF-A		120V 1P 2W	0.1	A-24	1/2"C,1#12,#12N,#12G	SWITCHED WITH LIGHTS
EWH-A		208V 2P 2W	1.5	A-5,7	1/2"C,2#12,#12G	30A/2P/NEMA 1
EWH-A		208V 2P 2W	1.5	A-1,3	1/2"C,2#12,#12G	30A/2P/NEMA 1
EWH-A		208V 2P 2W	1.5	A-2,4	1/2"C,2#12,#12G	30A/2P/NEMA 1
EWH-A		208V 2P 2W	1.5	A-6,8	1/2"C,2#12,#12G	30A/2P/NEMA 1
WH-1		208V 2P 2W	3	A-9,11	1/2"C,2#12,#12G	30A/2P/NEMA 1

LUMINAIRE SCHEDULE

CALLOUT	SYMBOL	LAMP	DESCRIPTION	MODEL	VOLTS
D		(1) 13W LED	6" LED RECESSED DOWNLIGHT	LITHONIA LDNG-35/10-L06-MVOLT-EZ10	120V 1P 2W
F		(1) 100W LED	EXTERIOR FAN/LIGHT	STELLAR MAD7993-BLW	120V 1P 2W
S		(1) 11W LED	EXTERIOR SCONCE LIGHTING	KICHLER 11250BKT30	120V 1P 2W
S4		(1) 42W LED	4' LED STRIP	LITHONIA ZL1N-L48-5000LM-FST-MVOLT-40K	120V 1P 2W
T		(2) 1.5W LED	EMERGENCY LIGHTING UNIT	LITHONIA ELM2-LED	120V 1P 2W
X		(1) 5W LED	THERMOPLASTIC EXIT SIGN WITH BACKUP BATTERY	LITHONIA LQM-S-W-3-R-120/277-EL-N	120V 1P 2W

wright gardner architect llc
154 Krog Street, #125
Atlanta, GA 30307
404-218-8460

PROFICIENT ENGINEERING
6991 Peachtree Industrial Blvd Building 700
Peachtree Corners, Georgia 30092
404.330.9798
PROJECT # 118270

ARCADE CITY PARK PHASE 1 IMPROVEMENTS

ARCADE, GEORGIA

stamp:

GEORGIA REGISTERED No. 032547 PROFESSIONAL ENGINEER BRIAN M ARMENTA

revisions

No.	Description	Date

sheet title:

SCHEDULES AND ONE-LINE

project number: 17-053
drawing date: 02.06.2019
scale: as noted

sheet number:

E0-02

☐ NOT ISSUED FOR CONSTRUCTION
■ ISSUED FOR CONSTRUCTION

GENERAL NOTES

REFER TO ARCHITECTURAL REFLECTED CEILING PLAN FOR EXACT LOCATIONS OF ALL CEILING MOUNTED DEVICES.

ALL RECEPTACLES SHALL BE GROUNDED AS REQUIRED BY ARTICLE 250-146.

PROVIDE UNSWITCHED HOT LEG OF CIRCUIT TO EMERGENCY LIGHTING AND EXIT SIGNS.

KEYNOTES

1. WATER HEATER MOUNTED ON PLATFORM. SEE PLUMBING DRAWINGS FOR ADDITIONAL REQUIREMENTS.
2. EXHAUST FAN TO BE CONTROLLED WITH LIGHT SWITCH.
3. RECEPTACLE LOCATED ABOVE DOORWAY FOR POWER TO DECORATIVE LIGHTING. COORDINATE EXACT HEIGHT WITH OWNER PRIOR TO ROUGH-IN.
4. PANEL LOCATED IN WEATHERPROOF, LOCKABLE ENCLOSURE.
5. EXTERIOR LIGHTING TO BE CONTROLLED WITH PHOTOCELL.
6. OUTDOOR RECEPTACLES FOR FESTIVAL PURPOSES TO HAVE LOCKABLE COVERS.

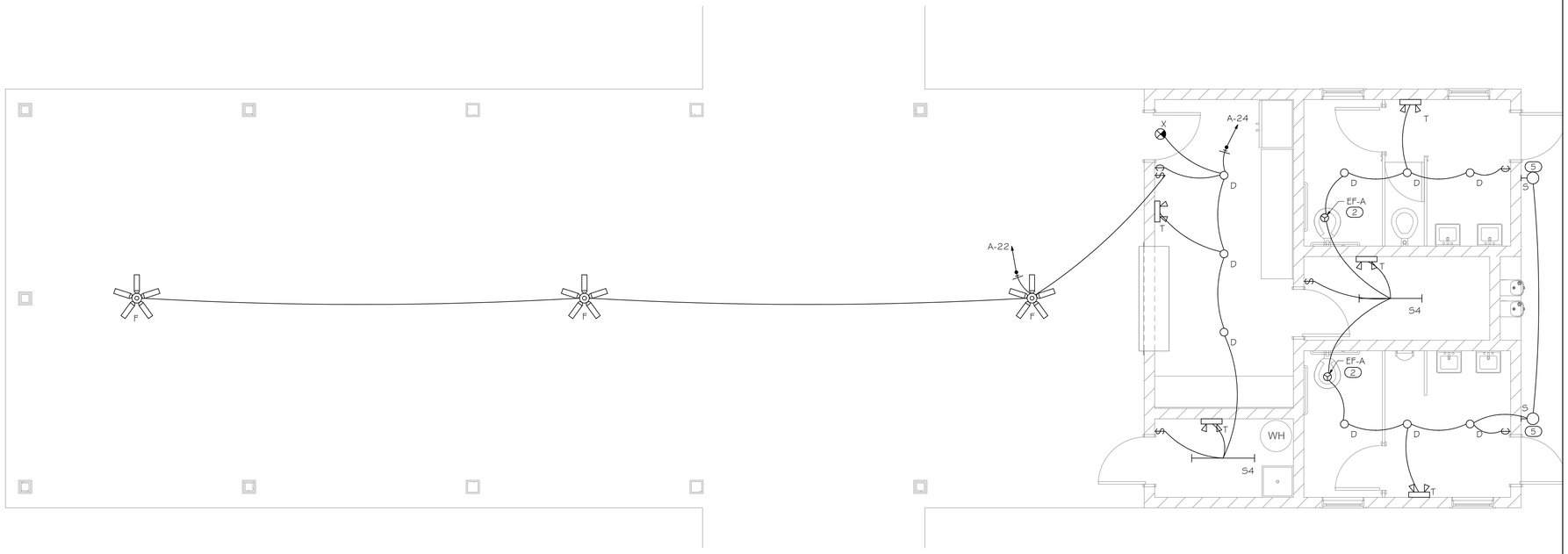

2 FLOOR PLAN - LIGHTING

1/4" = 1'-0"

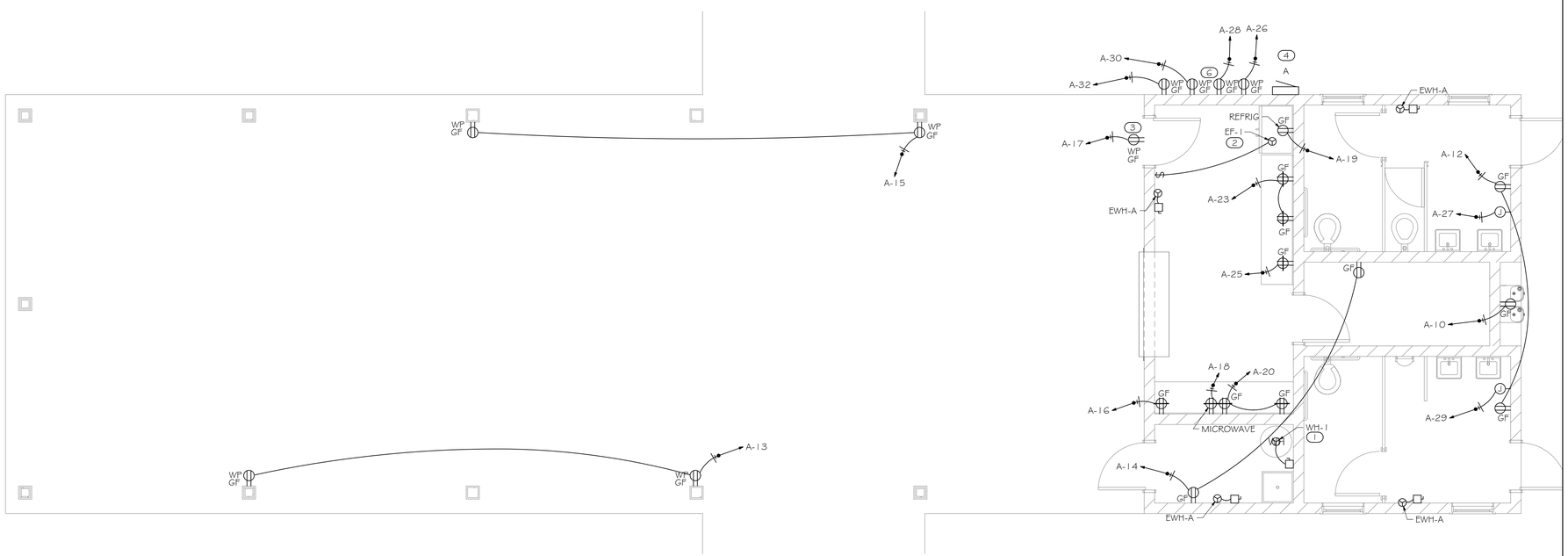

1 FLOOR PLAN - POWER

1/4" = 1'-0"

wright gardner architect llc

154 Krog Street, #125
Atlanta, GA 30307
404-218-8460

PROFICIENT ENGINEERING
6991 Peachtree Industrial Blvd Building 700
Peachtree Corners, Georgia 30092
404.330.9798
PROJECT # 118270

ARCADE CITY PARK PHASE 1 IMPROVEMENTS

ARCADE, GEORGIA

stamp:

GEORGIA REGISTERED No. 032547 PROFESSIONAL ENGINEER BRIAN M. ARMENTA

revisions

No.	Description	Date

sheet title:

FLOOR PLAN ELECTRICAL

project number: 17-053
drawing date: 02.06.2019
scale: as noted

sheet number:

E1-01

☐ NOT ISSUED FOR CONSTRUCTION
■ ISSUED FOR CONSTRUCTION